1 INTRODUCTION.

2. PURPOSE. The purpose of this manual is to provide cargo-handling personnel with sufficient information and data to load, secure, and offload all types of cargo efficiently and safely, and to explain the restrictions governing these operations. The manual includes procedures pertaining to ground functions only.

3. SCOPE. The manual contains descriptions of physical characteristics of cargo items and helicopter handling equipment. Complete instructions are included for preloading, loading, post-loading, and offloading procedures pertaining to various types of cargo transported in the helicopter. Instructions are also given for seat and litter installation. Pickup and delivery of external cargo, and airdrop procedures of personnel and cargo are not covered in this manual. Restrictions based on the strength of the helicopter structure are necessary to control the amount and placement of cargo. These restrictions shall be complied with to ensure safety of the helicopter and crew.

4. USE OF THE MANUAL. This manual is prepared for use by loadmasters and cargo-handling personnel. It provides information which will enable them to do their work safely and efficiently. Information is presented in the sequence in which it is likely to be required for use.

5. CHANGE SYMBOLS. Revised text is indicated by a black vertical line in either margin of the page. The change sysmbol shows where there has been a change. The change might be material added or information restated. A change symbol in the margin by the chapter number and title indicates a new or completely revised chapter.

6. WARNINGS, CAUTIONS, AND NOTES. The following definitions apply to WARNINGS, CAUTIONS, and NOTES found throughout the manual.

WARNING

An operating procedure, practice, condition, statement, etc, which, if not strictly observed, could result in injury to or death of personnel.

CAUTION

An operating procedure, practice, condition, statement, etc, which, if not strictly observed, could result in damage to, or destruction of equipment, or loss of mission effectiveness.

NOTE

An essential operating procedure, condition, or statement, which must be highlighted.

7. WORDING. The concept of word usage and intended meaning which has been adhered to in this manual is as follows:

a. "Shall" has been used whenever application of a procedure is mandatory.

b. "Should" has been used whenever application of a procedure is recommended.

c. "May" and "need not" have been used when application of a procedure is optional.

d. "Will" has been used only to indicate futurity, never to indicate any degree of requirement for application of a procedure.

8. DESCRIPTION OF HELICOPTER. The CH-53A, CH-53D, RH-53D, CH-53E, and MH-53E helicopters are manufactured by Sikorsky Aircraft, Corporation, 6900 Main Street, P. O. Box 9729, Stratford, Connecticut 06497-9129. The primary mission of the CH-53A, CH-53D, and CH-53E helicopters is for the transport of cargo, and secondarily for movement of troops. The primary mission of the RH-53D and MH-53E is airborne mine countermeasures (AMCM), and secondarily for movement of cargo, equipment, and transportation of passengers. All helicopters can be configured for the transport of litter patients, and have a hydraulically-operated high-speed rescue hoist with a 600-pound capacity, for rescue purposes. The CH-53A, CH-53D, and RH-53D helicopters are capable of transporting a normal load of about 8000 pounds. Cargo, consisting

primarily of palletized loads or wheeled vehicles, is loaded internally through a large ramp at the aft end of the fuselage. Cargo winches and roller cargo conveyors and skid strips mounted on the cargo compartment floor aid the loading of cargo. External loads may be carried on a 20,000-pound capacity cargo hook. When equipped as a troop transport, 37 troop seats or 24 pole-type litters may be installed in the cargo compartment. Some CH-53D helicopters are configured for installation of 55 troop seats. The CH-53E and MH-53E helicopters have similar capabilities and may be configured with 55 troop seats, and external loads up to 36,000 pounds may be carried.

9. DESCRIPTION OF HELICOPTER FEATURES.

10. GENERAL. All H-53 model helicopters have the same basic configuration and facility for transporting passengers and internal cargo. Critical dimensions, accessories, and specific configurations do vary and are identified in the text where applicable.

11. CARGO COMPARTMENT. The cargo compartment extends from fuselage STA 162 to STA 522. Its cross section is essentially constant throughout the 30-foot length and forms a rectangle about 7 feet 6 inches wide and 6 feet 3 inches high. For critical dimensions and obstructions within the cargo compartment see Figure 1. Aft of the cargo compartment is a hydraulically-operated rear loading ramp and door. As the ramp is lowered to the ground the door swings upward to provide a large opening for cargo loading. Flippers hinged to the aft end of the ramp are swung out to complete the transition to ground level. The cargo floor and ramp are equipped with roller cargo conveyors which aid loading. The cargo conveyors are easily converted to skid strips for the loading of wheeled vehicles, troops, or litters. The cargo floor is equipped with 5000-pound, 9700-pound, 10,000-pound and 20,000-pound tiedown fittings. Two winches, each with a 2200-pound capacity, are in the forward end of the cargo compartment in the CH-53A, CH-53D, and RH-53D. A single centerline winch with a 5000-pound capacity is installed in the CH-53E and MH-53. The winches are controlled by a portable pendant. The CH-53A, CH-53D, and RH-53D have cable guides and snatch block fittings at the aft end of the ramp, to aid cargo loading and unloading. Access to the cargo hook(s) is by a hinged door(s) in the cargo floor. A portable switch for releasing the external cargo load is on the left wall in the cargo compartment.

NOTE

On helicopoters modified by AFC 497, the cargo dimension is reduced by 2 inches at stations 222–242.

12. CARGO FLOOR AND RAMP. The cargo floor (Figure 2) is 30 feet long, 7 feet 6 inches wide, and extends from fuselage STA 162 to fuselage STA 522. The ramp at the aft end of the floor is 7 feet 2 inches long by 7 feet 2 inches wide, and hinges downward. Hinged flippers at the aft end of the ramp provide a smooth transition from the ground to the ramp to aid loading of cargo and wheeled vehicles. Hinged treads and cable protectors or chafing strips are provided at the cargo floor/ramp hinge to insure smooth passage of cargo over the hinge. The MH-53E replaces the normal ramp with a 90° stub ramp for AMCM missions. The 90° ramp surface is about 4 feet long, and 8 feet wide, contains two roller conveyor/skid-strip assemblies, and no provision for flipper assemblies.

13. Strength Limits. The cargo floor, conveyors, and treadway areas will support the stowed loads shown in Figure 3. The treadway areas will support rolling loads from the ramp forward of 5150 pounds to STA 332. The ramp, when horizontal, will support 2200-pound pallet loads. With the ramp extended to the ground, one aft corner supported and the opposite corner 3 inches off the ground (representing uneven terrain), it will support a symmetrically placed axle load of 5150 pounds for a rolling load.

14. 5,000 - and 9,700-Pound Tiedown Fittings. Two rows of tiedown fittings (Figure 4), spaced 50 inches apart, extend along the entire length of the floor. The fittings, spaced at 20-inch intervals in each row, can restrain forces of 5000 or 9700 pounds respectively within the cone of action shown in Figure 5. A stud in the center of the fittings is used to secure troop seats or litters.

15. Ramp Snatch Block Fittings. Two 4400-pound rated fittings (Figure 4), outboard at the aft end of the ramp, are used for attaching snatch blocks which are used in conjunction with the winch for unloading cargo.

16. 10,000- and 20,000-Pound Tiedown Fittings. The 10,000- and 20,000-pound tiedown fittings (Figure 4) are secured to the fuselage frames just above the cargo floor side panels. The fittings can restrain forces up to 10,000 and 20,000 pounds, respectively, within the cone

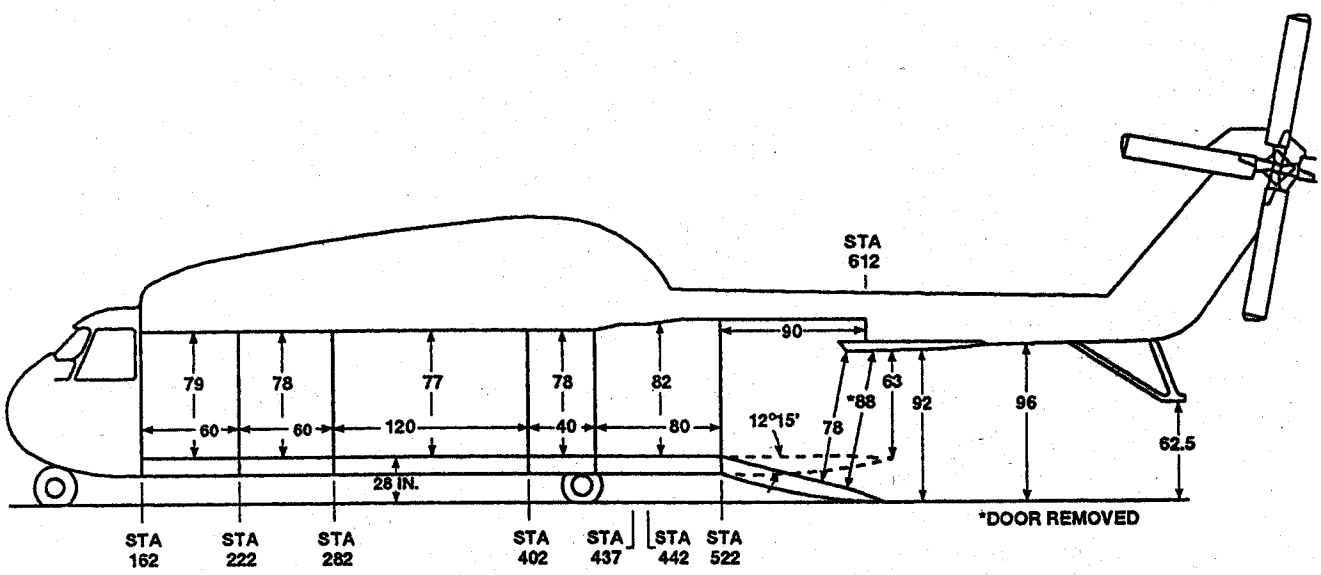

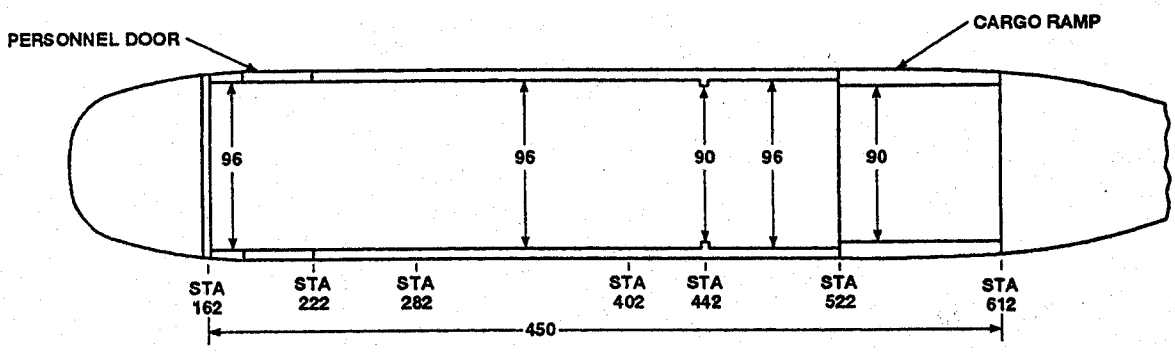

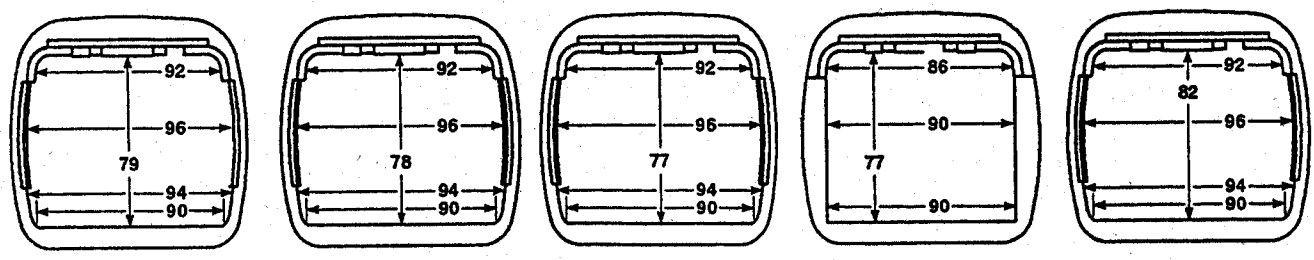

STA 162 THRU STA 222 | STA 222 THRU STA 282 AND STA 402 THRU STA 442 | STA 282 THRU STA 402 | STA 442 | STA 442 THRU STA 522

CH-53A, CH-53D, AND RH-53D

NOTE

- ALL DIMENSIONS SHOWN IN INCHES
- EXTERNAL CLEARANCES WILL VARY WITH HELICOPTER AND GROUND SURFACE CONFIGURATION

HC3746_1
SA

Figure 1. Cabin Dimensions (Sheet 1 of 2)

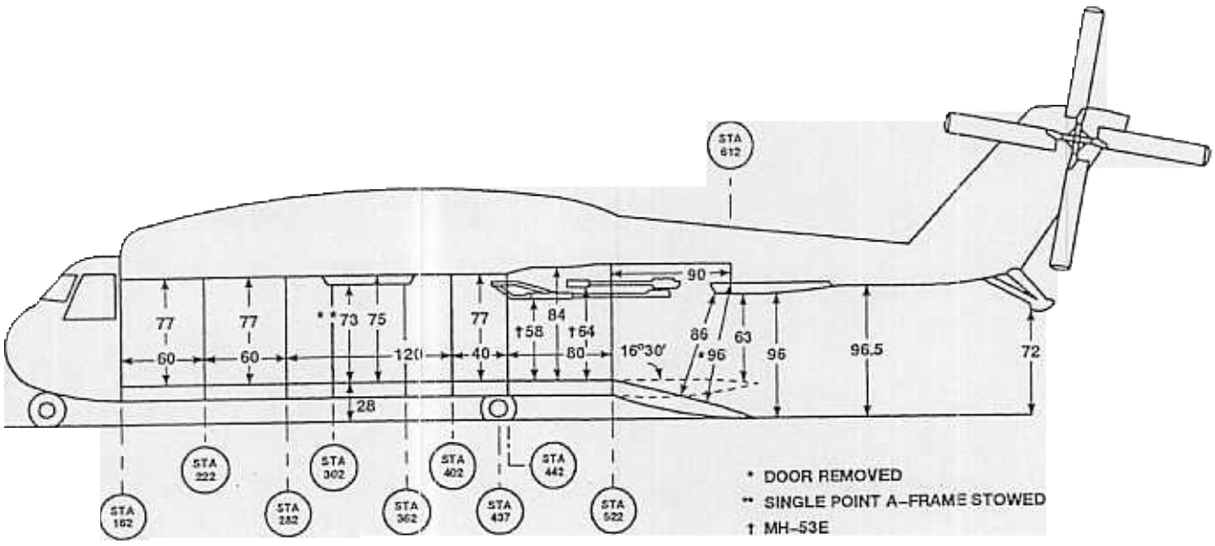

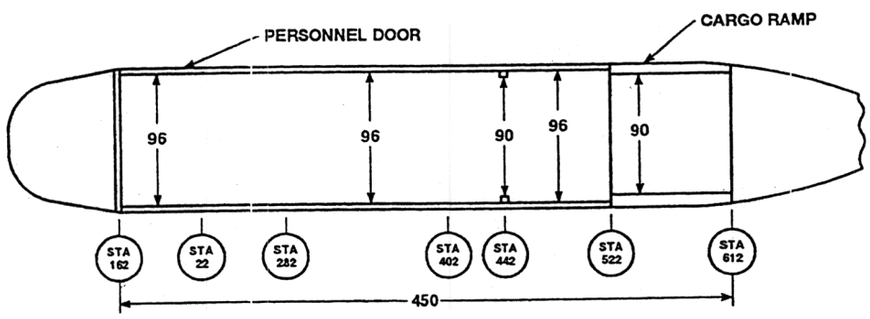

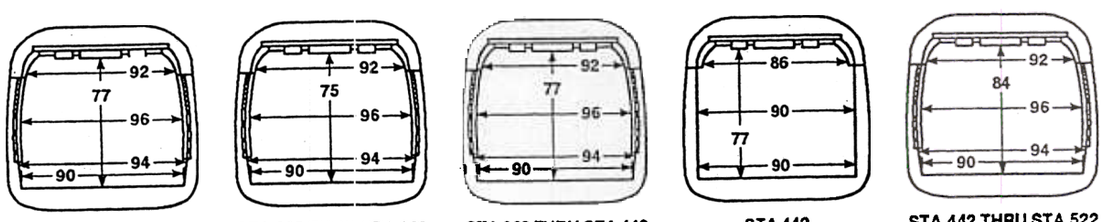

STA 162 THRU STA 302 | STA 302 THRU STA 362 | STA 362 THRU STA 442 | STA 442 | STA 442 THRU STA 522

CH-53E AND MH-53E

NOTES

1. ALL DIMENSIONS SHOWN IN INCHES.
2. EXTERNAL CLEARANCES WILL VARY WITH HELICOPTER AND GROUND SURFACE CONFIGURATION.
3. AFTER INCORPORATION OF AFC 497, THE CARGO DIMENSION IS REDUCED BY 2 INCHES AT STATION 222-242.

HM8858_2
SA

Figure Cabin Dimensions (Sheet 2)

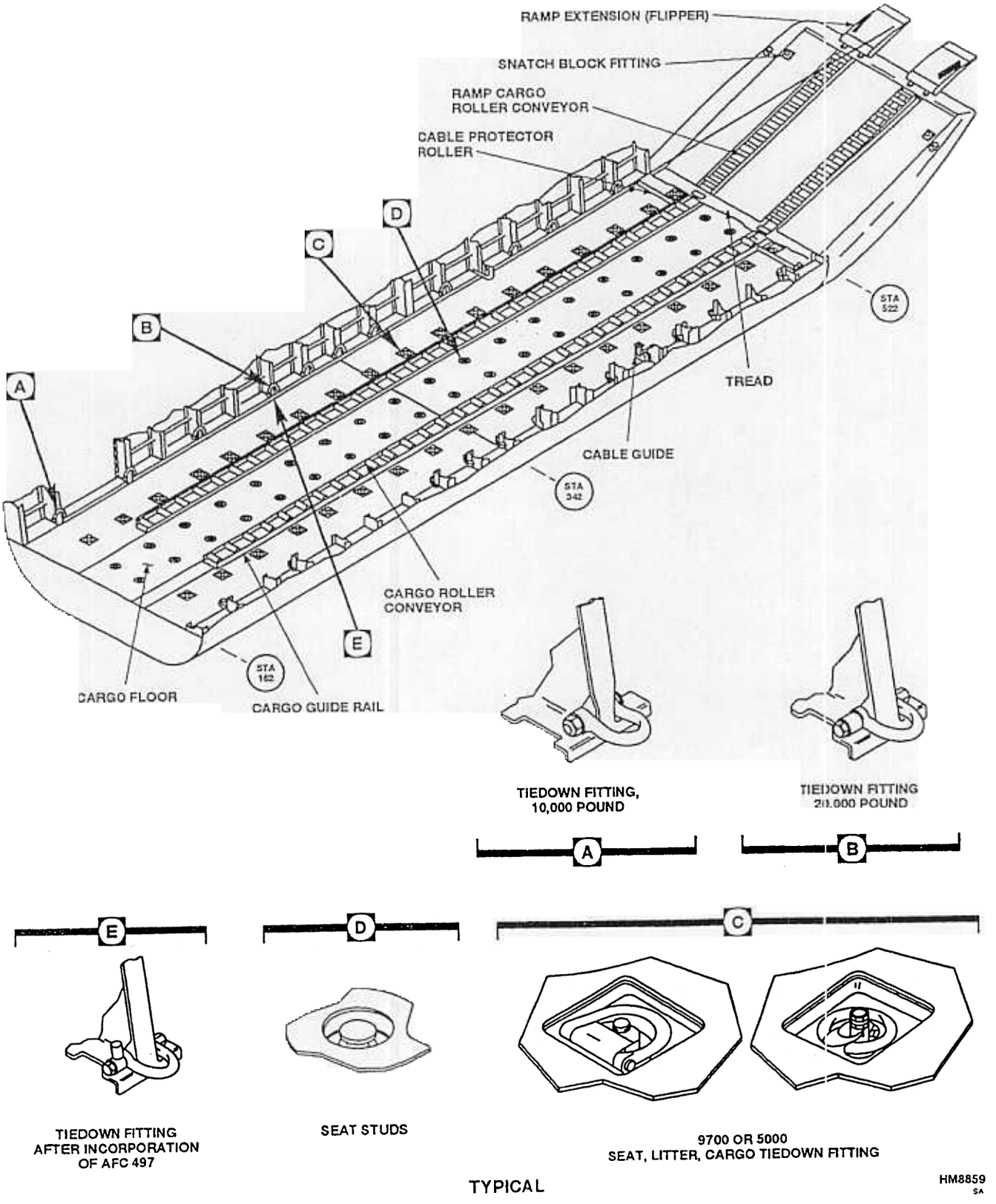

Figure 2. Cargo Floor and Ramp

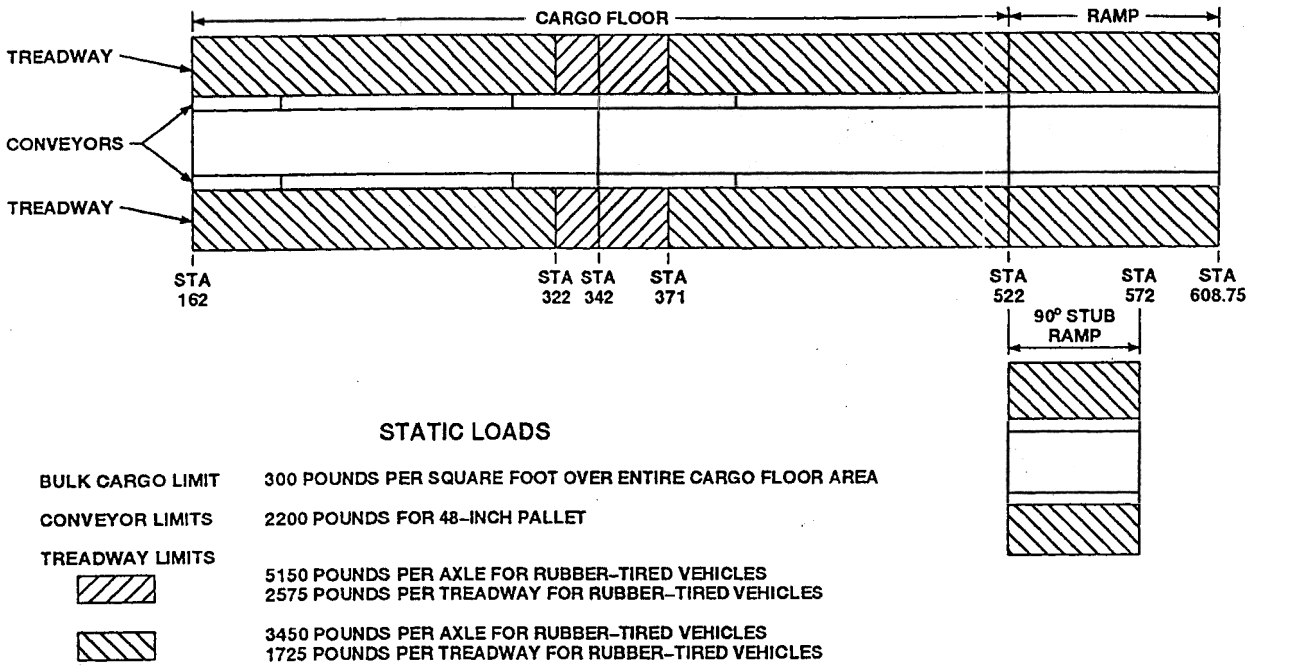

Figure 3. Cargo Floor and Ramp Strength Limits

of action shown in Figure 5. A spacer installed on the bolt securing the fitting to the fuselage frame provides an attachment point for the sidewall troop seats.

17. Seat Studs. Two rows of seat stud fittings (Figure 4) extend the length of the floor of certain helicopters at 20-inch intervals for securing the centerline seat installations.

18. Cargo Conveyor Assembly, Guide Rails, and Skid Rail. The cargo conveyor assembly consists of two reversible conveyors recessed into the cargo compartment floor and ramp. The conveyors extend aft from STA 202 to the end of the ramp and are spaced 36 inches on center. The number and length of the sections vary with models. On CH-53A, CH-53D, and RH-53D helicopters, each conveyor is composed of four sections. The shortest section is installed on the ramp, the longest section is at the aft end of the cargo compartment floor, and the remaining two identical sections are for the center and forward portions of the floor. On CH-53E and MH-53E helicopters, each conveyor is composed of five sections. The longest section is at the aft end of the cargo compartment floor, the next longest section is the forward portion, two identical short section fit between the forward and aft sections, and the remaining section is installed on the ramp. One side of each conveyor section (Figure 6) consists of a series of rollers to aid the loading of pallets or other general cargo. The other side is a raised flat surface. Four bumpers are installed between the four rollers at the aft end of the ramp conveyors to prevent damage to the conveyors from cargo being loaded. Guide rails may be installed on the outboard side of the conveyors when the roller side of the conveyor is being used to insure that the cargo remains centered. The guide rails extend above the level of the rollers and are used to keep loads that are not wider than the conveyor in alignment when loading or offloading. When the rollers are not in use, the conveyors are installed with the flat surface up. The conveyors are designed to support a 2200-pound load on a 48-inch-long pallet. CH-53E and MH-53E helicopters also have a rail installation, with a raised flat surface, along the centerline of the cargo compartment. Sections of the rail may be unlatched by lifting the latching handle, and removed to provide access to doors on the cargo floor.

19. TROOP AND CARGO ENTRANCES.

20. Personnel Door. The personnel door, on the forward right side of the cabin, is used as a normal entrance for crew personnel. The door consists of an upper door and a lower door. The upper door is hinged

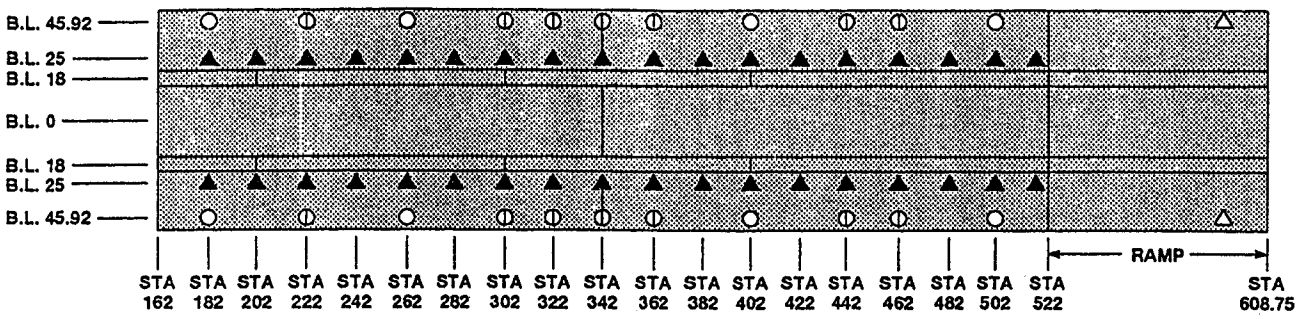

LEGEND

- ▲ SEAT, LITTER, CARGO, TIEDOWN FITTINGS, 5000 POUNDS.
- △ SNATCH BLOCK FITTINGS, 4400 POUNDS.
- ○ TIEDOWN FITTINGS, 10,000 POUNDS.
- ⦶ TIEDOWN FITTINGS, 20,000 POUNDS

NOTE

SOME CH-53D HELICOPTERS HAVE CENTER ROW SEAT STUDS SAME AS ⊡ ON CH-53E.

CH-5A, CH-53D (TYPICAL)

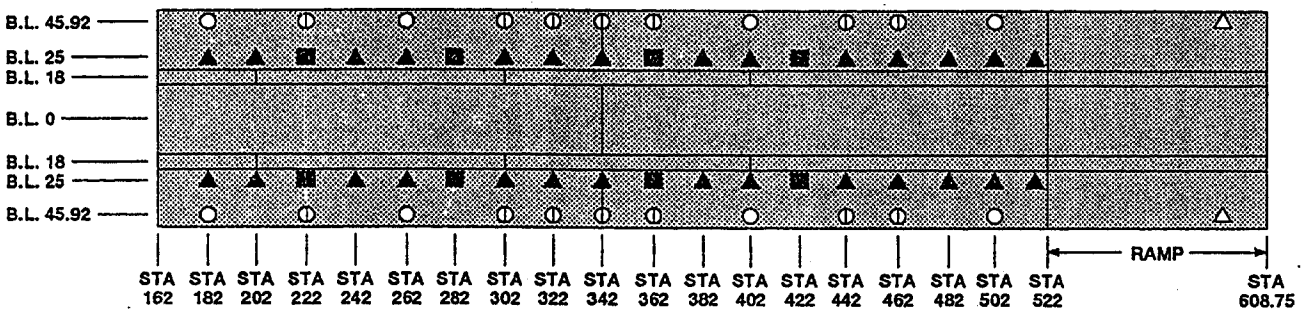

LEGEND

- ■ SEAT, LITTER, CARGO, WINCH TIEDOWN FITTINGS, 9700 POUNDS.
- ▲ SEAT, LITTER, CARGO, TIEDOWN FITTINGS, 5000 POUNDS.
- △ SNATCH BLOCK FITTINGS, 4400 POUNDS.
- ○ TIEDOWN FITTINGS, 10,000 POUNDS.
- ⦶ TIEDOWN FITTINGS, 20,000 POUNDS

RH-53D (TYPICAL)

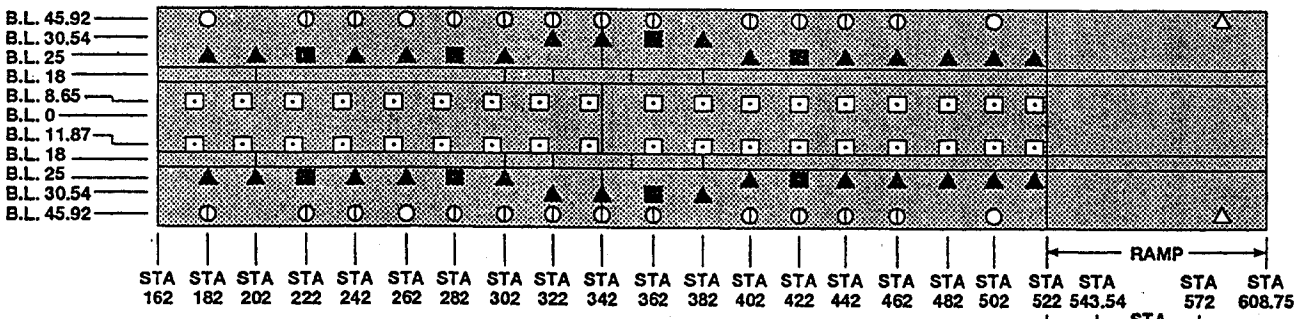

LEGEND

- ■ SEAT, LITTER, CARGO, WINCH TIEDOWN FITTINGS, 9700 POUNDS.
- ▲ SEAT, LITTER, CARGO, TIEDOWN FITTINGS, 5000 POUNDS.
- △ SNATCH BLOCK FITTINGS, 4400 POUNDS.
- ○ TIEDOWN FITTINGS, 10,000 POUNDS.
- ⦶ TIEDOWN FITTINGS, 20,000 POUNDS
- ⊡ CENTER ROW SEAT STUDS.

NOTE

SOME CH-53E HELICOPTERS HAVE VARIATION OF ○ AND ⦶ TIEDOWN FITTINGS SHOWN.

CH-53E, MH-53E (TYPICAL)

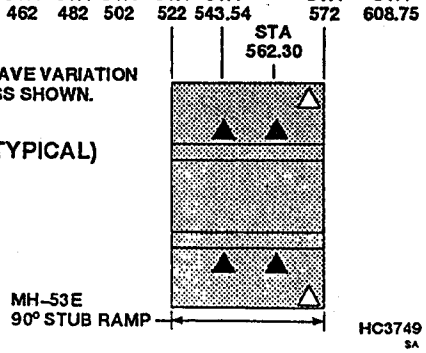

Figure 4. Tiedown Fitting Location

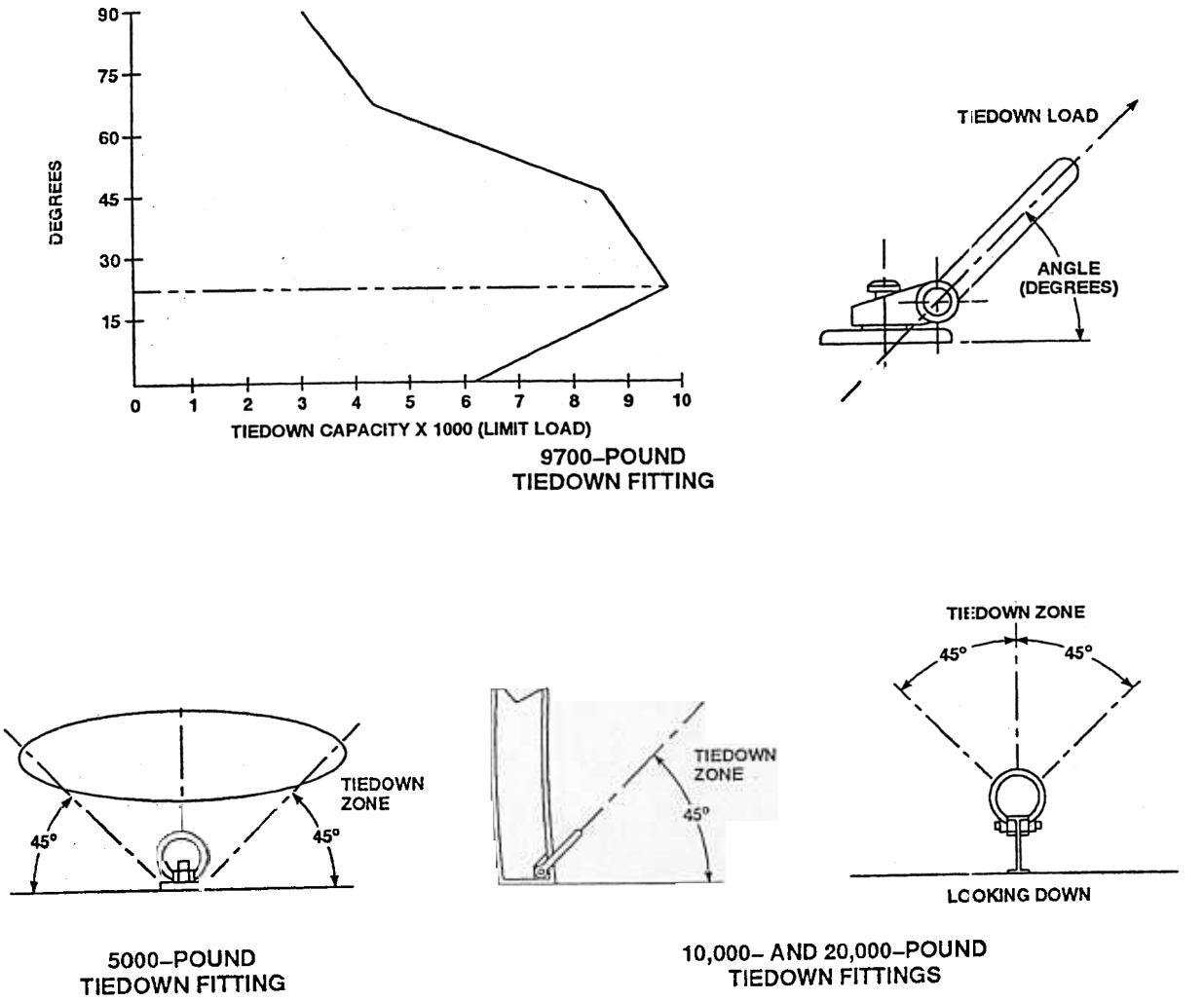

HC3750
SA

Figure 5. Tiedown Fitting Cone of Action

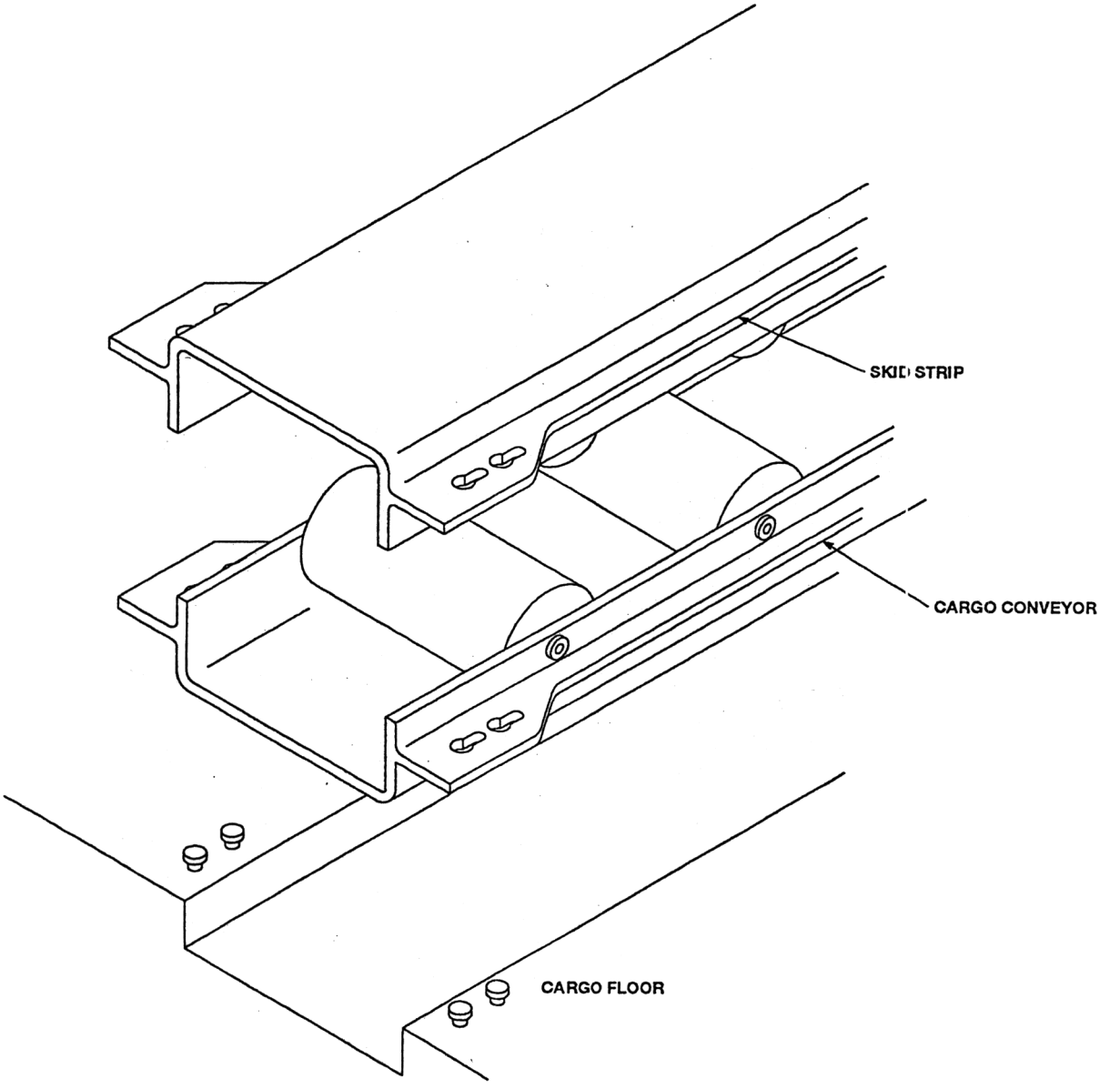

HC3751
SA

Figure 6. Cargo Conveyor - Skid Strip

at the top and swings inward, and may be locked in the up position. The upper door also incorporates a release mechanism allowing it to be jettisoned in an emergency. The lower door, on CH-53A and CH-53D helicopters, is hinged on the bottom and provides steps to the ground when open. The lower door, on RH-53E, and MH-53E helicopters, swings inward on vertical hinges against the forward bulkhead.

21. Ramp. The ramp, at the aft end of the cabin, is used for loading and unloading troops and cargo. The ramp may also be used as an emergency exit for troops.

22. TROOP SEATS AND COMFORT PROVISIONS.

23. Troop Seats. The troop seats (Figure 7), when installed along the sidewalls of the cargo compartment, will accommodate 37 troops. The seating arrangement permits 17 troops to be seated on the right side, and 20 troops on the left side. When not in use the seats along the sidewalls may be folded up against the cargo compartment wall and secured with straps. The CH-53E, MH-53E, and some CH-53D helicopters have provisions for an additional 18 troop seats facing right along the cabin center. Safety belts for each troop seat along the sidewalls are attached to anchor rings in the eyebolts attached to the rear support structure behind the seats. Seat belts for the seats along the cabin center are attached to the seat frame. An aircrewman seat with seat belt is installed on the right side of the cargo compartment just forward of the personnel door. A foldable jumpseat is provided at the entrance to the pilot's compartment.

24. Comfort Provisions. Comfort provisions (Figure 7) consist of a relief tube, on the left side of the forward bulkhead in the cargo compartment. A second relief tube which may be used by the pilot, copilot or jumpseat occupant is on the bulkhead behind the pilot's seat.

25. LITTER PROVISIONS. Provisions are included in the cargo compartment for installation of 24 pole-type litters (Figure 8). The litters are arranged in six tiers of four litters each. Combinations of troop seats and litters may be installed as shown in Figure 9. The litters are clamped by their outboard poles to brackets on the compartment side panels, and the inboard poles are supported in brackets on litter support straps suspended from the compartment ceiling and secured to the floor. The bottom litter stirrups rest on the cargo floor. The litter straps are stowed in plastic bags between the frames on the right and left walls at the cabin floor (storage bags are not provided on CH-53E and MH-53E helicopters).

26. EMERGENCY PROVISIONS.

27. Emergency Exits. Emergency exits and escape routes are discussed in paragraph 186.

28. Emergency Equipment. Emergency equipment is discussed in paragraph 192.

29. CARGO LOADING - UNLOADING AIDS.

30. Auxiliary Powerplant (APP). Electrical and hydraulic power for operation of the ramp, winches, and lighting during cargo loading and unloading operations is provided from generators and hydraulic pumps driven by the helicopter accessory gear box. The accessory gear box may be driven by the helicopter main gear box when the main rotor is turning, or by the APP when the rotor is stopped. For operation of the APP, refer to auxiliary powerplant in the respective helicopter NATOPS Flight Manual; NAVAIR 01-230HMA-1 (CH-53A/D), NAVAIR 01-H53AAA-1 (RH-53D), NAVAIR A1-H53BE-NFM-000 (CH-53E), and NAVAIR A1-H53ME-NFM-000 (MH-53E). Electrical and hydraulic power may also be provided by external sources.

31. Ramp System. The ramp and door (Figure 10), are used to aid the loading and unloading of cargo and personnel. The door operates simultaneously with the ramp so that when the ramp is lowered, the door raises. When the ramp is closed, the door extends downward to meet the ramp and form a complete closure. The ramp surface contains two roller conveyor assemblies and two flipper assemblies. The roller conveyors are used to aid the loading and unloading of cargo. Both roller conveyors may be inverted when not being used for cargo, and the reverse sides will provide skid-strip surfaces for vehicular, cargo, or troop transport operations. Flippers are provided at the end of each roller conveyor, to aid the entry of cargo onto the ramp. They may be adjusted laterally as required to match the tread of vehicle wheels. The flippers may be removed by pushing them laterally to the center of their hinge area and lifting them out. The flippers must be folded up before the ramp is closed. The MH-53E replaces the normal ramp with a 90° for AMCM missions. The 90° ramp contains two roller conveyor/skid-strip assemblies, and no provision for flipper assemblies. The ramp and door are electrically controlled and hydraulically actuated by pressure from the utility hydraulic system. The ramp may be lowered manually, when hydraulic or electrical power is not available, by the use of the uplock releases and a manual control valve.

WIDTH INCHES	UP TO 9	10	15	20	25	30	35
MAXIMUM LENGTH INCHES	340	319	211	157	125	103	88

FOR ALL PACKAGE HEIGHTS UP TO 60 INCHES, INCLUSIVE.

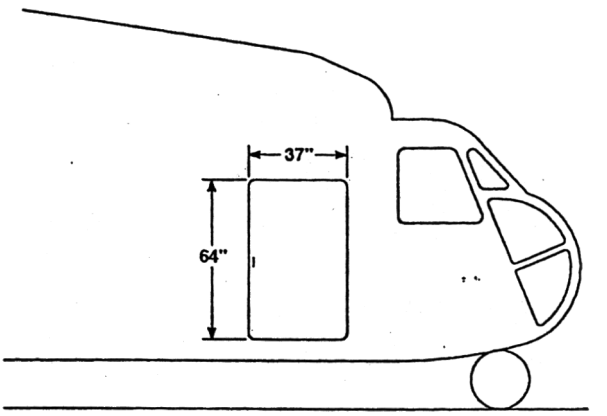

HC3776
SA

Figure 31 Cargo Size Diagram for Personnel Door Loading

weight was not added or removed at the CG. If the CG shifts too far forward or too far aft, the helicopter will develop unsafe flight characteristics. Cargo must be loaded so that the CG of the helicopter falls within the range specified in the Handbook of Weight and Balance Data, NAVAIR 01-1B-40. If the cargo is loaded so that the center of gravity of the cargo falls within the limits as specified, the center of gravity of the helicopter will be within the operating limits.

133. Restraint. Cargo in the helicopter is subjected to forces such as rough air, acceleration, autorotation, vibration, rough landing, and crash landings. These forces act more strongly in some directions than in others, and tend to shift the cargo unless it is properly restrained. Since the helicopter and the cargo both move forward during normal operation, the cargo will tend to keep on moving forward, unless properly restrained, if the helicopter is suddenly slowed by change of pitch, landing on soft ground, or stopped by a crash landing. The cargo must also be restrained against other forces trying to move it aft, from side to side (laterally), or up off the cargo floor (vertically).

134. LOAD CALCULATION. To eliminate the need to calculate center of gravity positions mathematically, mechanical calculators are provided with each helicopter. A Load Adjuster is provided for calculating weight and balance of CH-53A, CH-53D, and RH-53D helicopters, and a specially programmed Hewlett Packard (HP-41C) calculator is provided for calculating weight and balance of CH-53E and MH-53E helicopters. Their use in determining weight and balance in accordance with NAVAIR 01-1B-40 will ensure safe loading and provide an advance check of the balance position of each item of load added or expended. Instructions for the use of the Load Adjuster and calculator are provided with the respective instrument. The weight and balance data applicable to each individual helicopter is available to the loading crew in the Handbook of Weight and Balance Data, NAVAIR 01-1B-40, and is provided with each helicopter.

135. CARGO CENTER OF GRAVITY PLANNING. After determining the cargo weight, it is necessary to position the cargo in the cargo compartment so that the CG of the helicopter will be within allowable limits. Figure 33 shows the approximate CG range of cargo loads that are permissible on H-53 helicopters in order to keep the CG range of the helicopter within its limits.

CAUTION

Figure 33 is used for planning purposes only. Final weight and balance shall always be determined per NAVAIR 01-1B-40.

When cargo loads consist of a single item, the CG of the item should be placed in the cargo compartment within the allowable CG limits for the weight of the item. When cargo consists of more than one item, the heavier items of cargo should be placed so their CG is about in the center of the allowable CG stations, with the lighter items of cargo forward and aft of them.

136. CG Planning for Cargo Loads of More Than One Item.

a. Determine weight and CG of each item of cargo.

b. Arrange heaviest items toward center.

c. Determine CG of total cargo load.

d. Check cargo CG range by reference to Figure 33 and determine load placement by helicopter stations.

e. Determine final weight and balance remains within the operating limits as defined by NAVAIR 01-1B-40.

137. Computing Cargo Center of Gravity. When several items such as pallets or wheeled vehicles are being loaded, the weight and CG of each item must be known. After obtaining these factors the total weight and CG of the cargo load must be determined in order to place the load in the proper location within the cargo compartment. The method of determining the CG of a cargo load consisting of more than one item is shown in Figure 34. This method can also be used to determine the CG of wheeled vehicles; however, the weight on each axle and the distance between axles must be known. In Figure 34, three palletized loads are being carried; however, the formula developed may be used for any number of items.

138. Sample Problem for Computing Cargo Center of Gravity. Three pallets weighing 1200, 2000, and 1800 pounds respectively, are to be loaded. The size of the pallets and the distance between pallets is shown in Figure 35. The center of gravity of each palletized load must be known or determined. For the purpose of simplification in this sample problem, the CG of the load on each

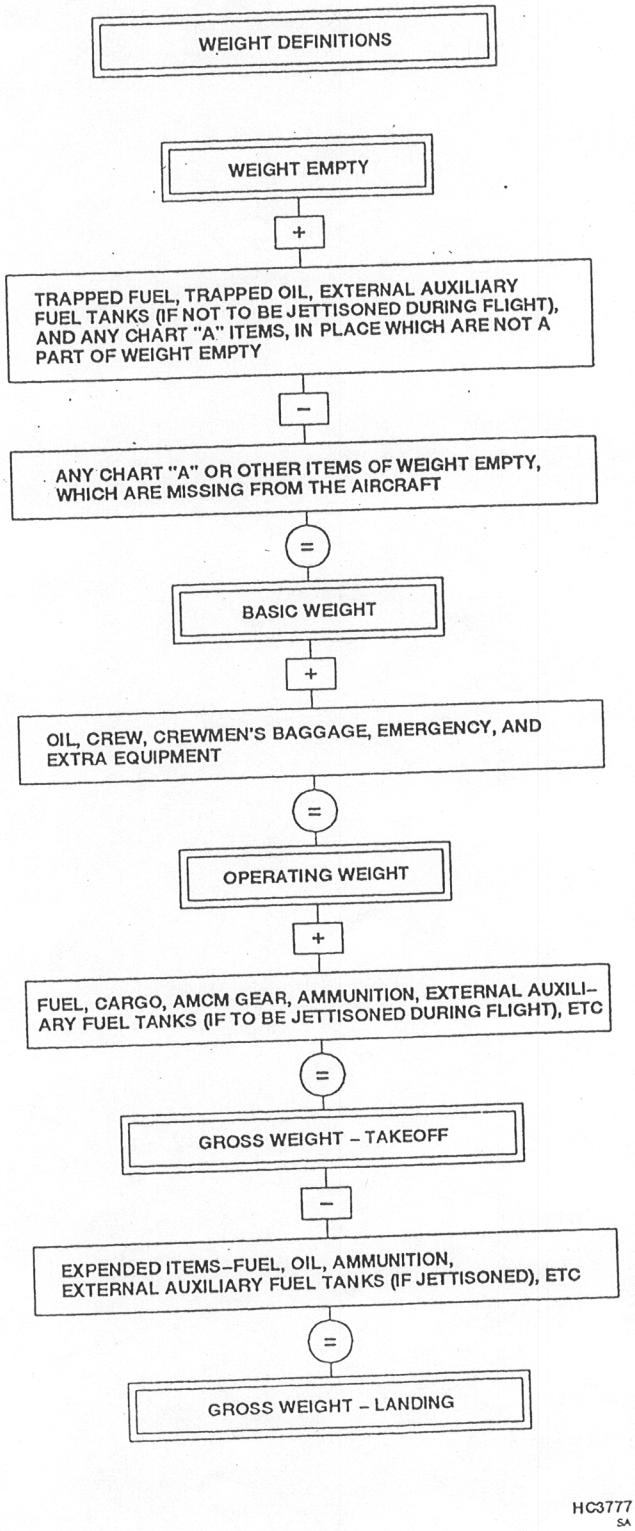

Figure 32. Weight Definition

12

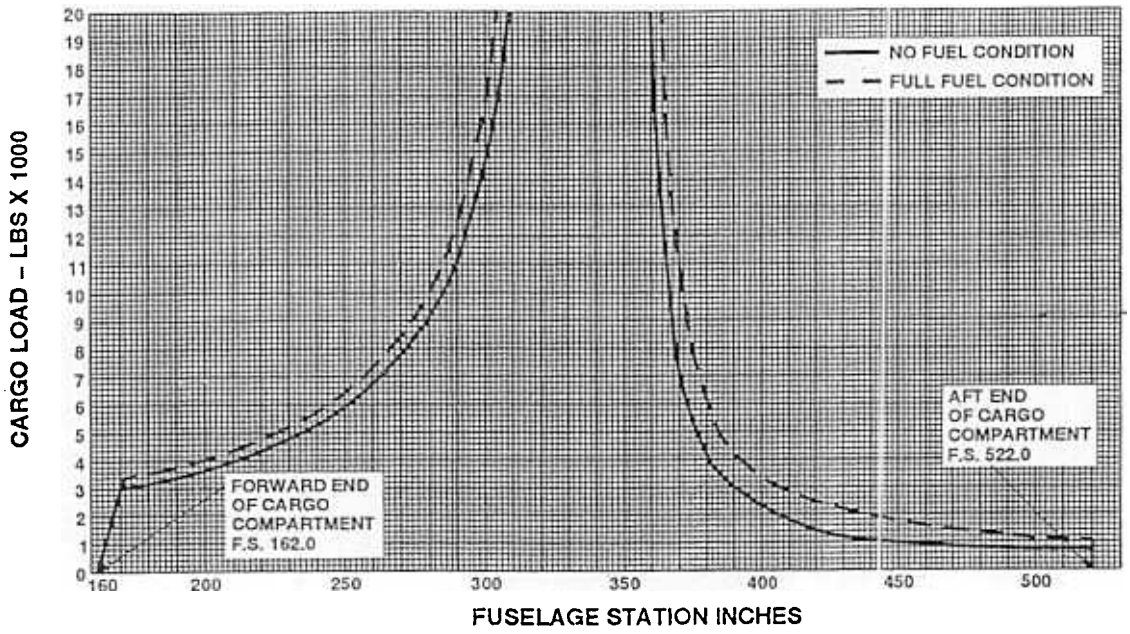

CAUTION: TO BE USED FOR PLANNING PURPOSES ONLY. FINAL WEIGHT AND BALANCE MUST ALWAYS BE DETERMINED IN ACCORDANCE WITH NAVAIR 01-1B-40.

ALLOWABLE CG OF CARGO – FUSELAGE STATIONS
CH-53A, CH-53D, RH-53D

HC3778_1 SA

Figure 33. Cargo Center of Gravity Placement Chart (Sheet 1 of 3)

pallet is assumed to be at the center of the pallet. After determining the CG of each palletized load, determine the CG of the cargo as shown in Figure 35. Determine from Figure 33 (Sheet 1 of 2) that the CG of a cargo load weighing 5000 pounds (1200 + 2000 + 1800) must fall between STA 235 and STA 370. If it is desired to place the CG of the cargo at STA 250, place the forward end of the 1200 pound palletized load at STA 172 (250" - 78 = 172) and the other two pallets as shown in Figure 35.

139. LOADING. The time required to load the helicopter can be lessened by insuring that all equipment to be used is of the proper type and is assembled for use. When offloading from a vehicle directly into the cargo area, or when using a forklift, the clearance between the tail pylon and tail skid of the helicopter and the ground must be considered.

140. Loading equipment which should be considered for use:

a. Cargo loading straps.

b. Tiedown devices.

c. Snatch block and sheave assemblies.

d. Cable guides.

e. Train links.

Wheel chocks.

g. Shovels.

h. Flippers.

141. Data which should be considered before loading:

a. Weight and type of skids to be used. Determine that the pallets or skids being used are of proper size and are capable of supporting the cargo being loaded.

b. Weight of individual items of cargo.

c. Overall dimensions of each item of cargo (in inches).

d. Contact area for each item of cargo.

e. Amount of shoring required for non-palletized cargo.

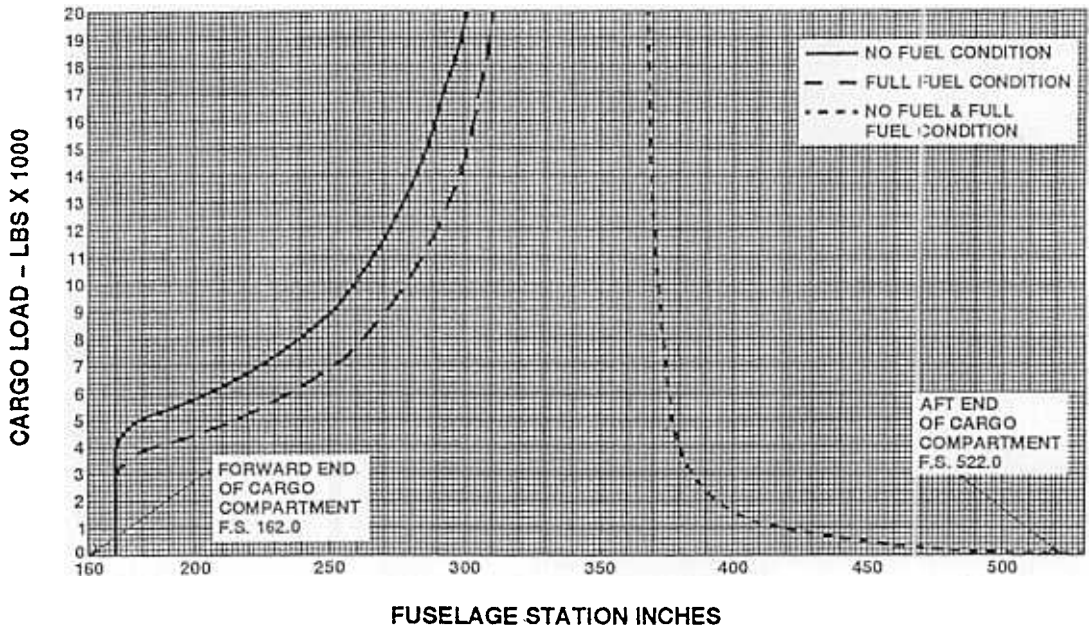

CAUTION: TO BE USED FOR PLANNING PURPOSES ONLY. FINAL WEIGHT AND BALANCE MUST ALWAYS BE DETERMINED IN ACCORDANCE WITH NAVAIR 01-1B-40.

ALLOWABLE CG OF CARGO – FUSELAGE STATIONS
CH-53E

HC3778_2
SA

Figure 33. Cargo Center of Gravity Placement Chart (Sheet 2)

f. Location of CG of individual items of cargo.

142. GENERAL CARGO PREPARATION AND LOADING. General cargo refers to all cargo except vehicles that can be loaded in the helicopter. It may vary from one large item to many small items. Small items should be loaded on pallets. The contour of the fuselage, the slope of the ramp when loading, and the arrangement of the equipment within the cargo compartment place limitations on the dimensions of cargo being loaded. The following considerations should be followed to expedite loading of general cargo:

a. Assemble cargo to be loaded.

b. Secure any loose ends or attaching parts of cargo.

c. Be sure all wooden boxes are nailed tight and secured.

d. Be sure boxes are to be loaded in accordance with instructions or arrows stamped on them.

e. Secure cargo to pallets with enough metal straps to provide restraint between cargo and pallet.

143. SHORING. Shoring is used for load distribution and protection of the cargo floor. Shoring for load distribution consists of direct shoring and shoring for floor protection. Direct shoring is used to spread concentrated loads of cargo supported by small steel wheels, casters, short skids, or small legs, over a larger area of the floor. This type of shoring consists of plank or heavy plywood placed on the cargo floor. The amount of thickness of direct shoring required for different types of loads is shown in Table 1. Shoring for protection of the cargo floor is used to prevent damage from sharp projections on the cargo such as cleats and studs, which could dig into the cargo floor. Shoring for protection of the cargo floor is the same as direct shoring except that the minimum thickness of shoring material to be used is 1/4-inch plywood or aluminum sheet. The 1/4-inch material is not suitable for load distribution.

144. Contact Pressure. Contact pressure is calculated for heavy items in order to determine whether a load can be carried inside the helicopter without exceeding the strength of the cargo floor. The contact pressure of skidded boxes and crates is determined by dividing the weight of the item by the area of the cargo floor the items which are supported by wheels, casters, rollers, and small

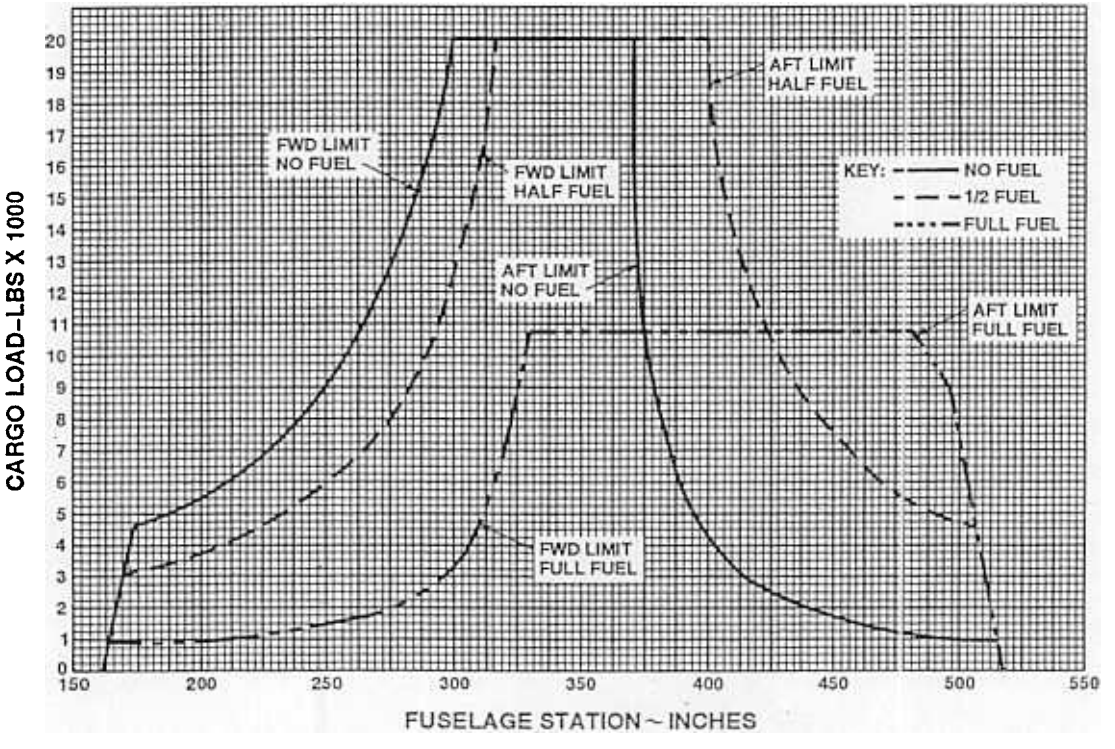

ALLOWABLE CG OF CARGO–FUSELAGE STATIONS
MH–53E

CAUTION: TO BE USED FOR PLANNING PURPOSES ONLY. FINAL WEIGHT AND BALANCE MUST ALWAYS BE DETERMINED IN ACCORDANCE WITH NAVAIR 01–1B–40.

HC3778_3
SA

Figure 33. Cargo Center of Gravity Placement Chart (Sheet 3)

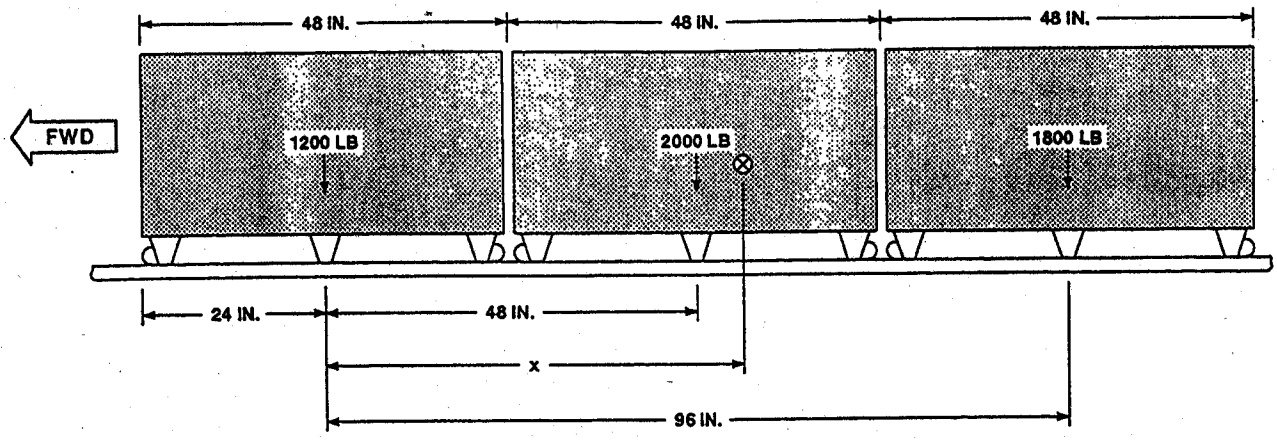

USING THE FORMULA $x = \frac{By + Cz}{A + B + C}$

A = 1200 LB x = DISTANCE FROM CG OF CARGO LOAD TO CG OF PALLET A
B = 2000 LB y = 48 IN.
C = 1800 LB z = 96 IN.

$$x = \frac{(2000 \times 48) + (1800 \times 96)}{1200 + 2000 + 1800} = 53.8 \text{ IN. OR } 54 \text{ IN.}$$

DISTANCE FROM FORWARD END OF FRONT PALLET TO CG OF LOAD = 24 IN. + 54 IN. = 78 IN.

HC3780 SA

Figure 35. Determining Center of Gravity of a Cargo Load - Sample Problem

d. Attach tow straps to front of single pallet or to front of first pallet in train (Figure 38).

e. Pull out winch cables.

NOTE

If the cables are reeled out hydraulically, keep a light load on the cables to prevent cable from curling up on the floor and jamming the winch.

If the cables will not pay out sufficiently to reach the cargo, 5000 pound tiedown straps may be used as cable extensions.

f. Attach winch cable to tow strap on front of pallet.

g. Extend portable pendant cable and move to a location to manage winching of load. If assistance is used to direct operation, use hand signals from Figure 36.

h. Winch cargo into helicopter. Before pallet contacts flippers, make sure that it is aligned with flippers and conveyors.

147. Cargo Loads Not in Alignment. Cargo loads not in alignment may be aligned by using a double snatch block arrangement, or by routing both winch cables through one of the cable guides in the cargo compartment (Figure 39).

148. VEHICLE PREPARATION AND LOADING.

149. Vehicle Preparation. Vehicles may be carried singly or in combinations which do not exceed the weight and size limitations of the helicopter. The dimensions of the vehicle should be checked before trying to load it into the helicopter. Some vehicles can be reduced in height by taking down their tops or deflating the tires. Lengths may be reduced by removing bumpers. Widths can seldom be reduced. The following should be considered when preparing vehicles for loading:

a. Assemble vehicles to be transported.

b. Fold rear view mirrors, windshields, tail gates, and antennas.

c. Secure loose equipment in all vehicles.

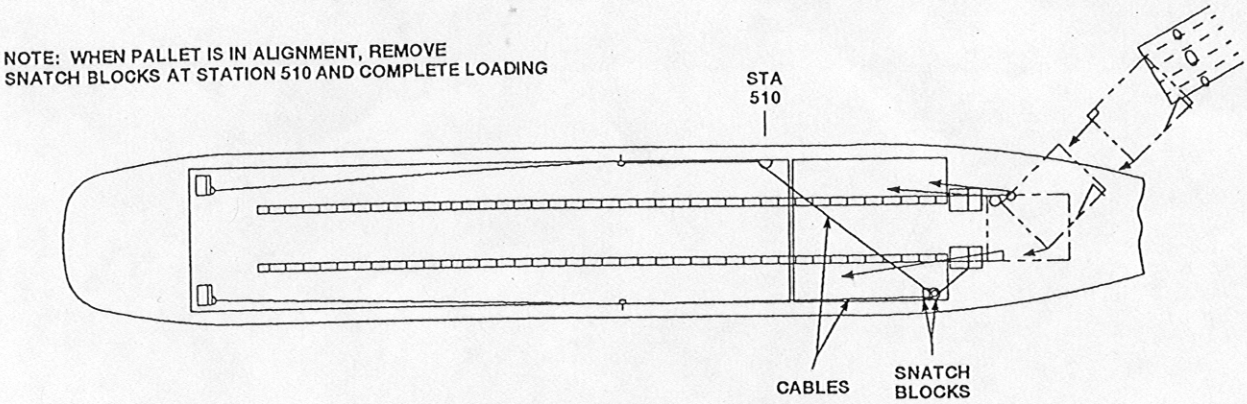

ALIGNMENT OF OFFSET LOADS
CH-53A, CH-53D, AND RH-53D

HC3784
SA

Figure 39. Offset Load Alignment

d. Limit amount of fuel in each gas tank to three quarters of its capacity, to prevent fuel being forced out filler neck while helicopter is in flight.

e. Tighten all gas tank caps, battery caps, and oil filler caps.

f. Determine overall dimensions of each vehicle to assure it can be loaded.

g. Determine weight of each vehicle (in pounds).

h. Determine wheel load of each vehicle (in pounds) by dividing axle load by number of wheels per axle.

i. Determine center of gravity of vehicle.

j. Check brakes of all vehicles before driving them into helicopter.

k. Align vehicles with centerline of helicopter before driving them into cargo compartment.

l. Set vehicle in lowest gear, with gear case in low range.

m. Prearrange hand signals to be used for control when loading vehicles. See Figure 36.

150. Vehicle Loading. Vehicles may be loaded into the helicopter using their own power, or they may be winched into position with cargo winches.

NOTE

Loading is simplified when vehicles are centered in line with helicopter and ramp before actual loading.

a. Align vehicles carefully with ramp rear end first, to be sure they are positioned correctly.

b. Back or winch vehicle up ramp into helicopter.

c. Position vehicle at proper location inside helicopter.

d. After vehicle is positioned, check:

(1) Vehicle ignition off.

(2) Parking brakes set.

(3) Springs chocked when applicable.

(4) Wheel chocks in place when required.

CAUTION

If vehicle fuel is spilled, discontinue use of cargo winch and all electrical equipment which may possibly spark and cause fuel to ignite, ventilate cargo compartment, and wipe up spilled fuel.

17

151. Vehicle Loading Special Considerations.

a. If vehicle is backed into helicopter, vehicle driver must follow instructions of guide and not attempt to judge clearances himself. Prearranged maneuvering signals (Figure 36) must be clearly understood.

b. Two-wheel trailers are difficult to back up ramp into the helicopter using a jeep as a prime mover. To aid loading, trailers should be winched into helicopter whenever possible.

c. When loading vehicles without brakes, wheel chocks should be immediately available to prevent equipment from rolling beyond its loading position.

d. When winching trailers, and trailed howitzers into helicopters, it is necessary to steer equipment. This can be done with cargo winches or manually. Tongue or trail should be handled manually or supported otherwise, to prevent damaging the floor.

152. TROOP LOAD PREPARATION AND LOADING.

153. Troop Load Preparation. In addition to normal preflight, the following procedure applicable to the model helicopter should be done when preparing the helicopter for transport of troops:

a. Cable protectors stowed.

b. Guide rails removed.

c. Cargo floor and ramp conveyors converted to skid strips.

d. Proper number of troop seats installed.

e. Safety belts provided as a complete set for each seat.

f. Floor and cargo area cleared of unnecessary articles.

g. Ramp and personnel door clear.

h. Emergency equipment installed and checked. Flashlight and spares available, fire extinguisher charged, first aid kits sealed, and visual-aural debark system operative.

i. Parachutes available if required.

j. Troop vest available if required.

NOTE

Troop vests shall be worn on all overwater flights.

k. Cranial helmets available.

l. Sound attenuators available.

m. Cargo winch secured.

n. Winch control pendant stowed, and pendant cable retracted.

o. Ramp down and personnel door open.

154. Troop Loading. Direct troops during loading of helicopter, as follows:

CAUTION

Troops should be kept to the right side of the helicopter ramp when loading and off-loading (right side facing forward, left side facing aft) to avoid the tail rotor area.

NOTE

When cargo is to be carried with troops, the troops should sit aft of the cargo. When litters are to be carried with troops the troops should sit aft of the litters or litters and troops should be placed on opposite sides of the cabin.

a. Direct troops up ramp to proper seat.

b. Seat troops and direct them to fasten safety belts.

NOTE

Troop vests and flotation devices, if required, should be put on before seating.

c. Be sure that cranial helmets, sound attenuators, troop vests, and flotation devices, are on.

NOTE

Steel helmets are suitable cranial protection when chin strap is properly fastened.

d. Check seat belts fastened.

e. Notify pilot that troops are loaded.

f. Close ramp and personnel door when directed by pilot.

155. LITTER LOADING.

CAUTION

Patients requiring intravenous (IV) fluids should not be placed on the top litter. There is not enough height above the top litter to maintain a flow of intravenous fluid.

NOTE

Before loading, check litter patients' wounds to determine best loading arrangement for in-flight treatment.

a. Load front left tier of cargo compartment first, and alternate tiers, left and right, from that point to rear.

NOTE

The forward tier on the right side must be installed as far aft as possible in their support brackets, to prevent interference with the personnel door.

b. Load litters from top to bottom.

c. Load patient's head end of litter first. Load with patient's feet toward front of aircraft.

d. Load litters on outboard brackets first; then inboard brackets.

e. After all four litter handles are in place, engage each litter support locking bar and secure locking handle.

f. Secure inboard litter support strap fitting to proper stud on cargo floor.

g. Check that patient securing straps are attached and snug.

156. POST LOADING. After cargo has been loaded at the proper location within the cargo compartment to keep the helicopter center of gravity within limits, tiedown devices must be applied to secure the load and provide the required amount of restraint.

157. RESTRAINT CRITERIA. The amount of restraint that must be used to keep cargo from moving in any direction is "restraint criteria". It is expressed as the units of the force of gravity, or Gs, it must overcome. The Gs required to be restrained in the four directions are (Figure 40):

Forward	10 Gs
Aft	7.5 Gs
Side	3 Gs
Vertical	3 Gs Up

This means the force exerted by an object or cargo to be restrained is the normal weight times the Gs of the restraint criteria. For example, an object weighing 1000 pounds must have a forward restraint criteria of 10,000 pounds (1000 pounds × 10 Gs = 10,000 pounds) to restrain cargo if the helicopter is suddenly stopped of forward motion. Under other conditions, the same 1000-pound object must have a restraint criteria to restrain a force of 7,500 pounds aft, 3,000 pounds to either side, and 3,000 pounds upward. For the object to be safely carried, the restraint provided must be equal to, or greater than, these amounts.

158. Nomenclature. Restraint is given the name of the direction in which it is meant to keep the cargo from moving. "Forward restraint" keeps the cargo from moving forward. "Aft restraint" keeps it from moving aft. "Side restraint" keeps it from moving to one side or the other. "Vertical restraint" keeps it from moving upward only, the downward restraint is supplied by the cargo floor.

160. CARGO LOAD RESTRAINT. Tiedown devices, connected between the cargo load and the tiedown rings on the floor, provide the means for restraining the cargo load. Tiedown rings are rated by the load that they can restrain as shown in Table 1, and to the cone of action of their full rated strength as shown in Figure 5. To provide the proper restraint, the tiedown ring should have the same rating, or greater, as the tiedown device which is attached to it.

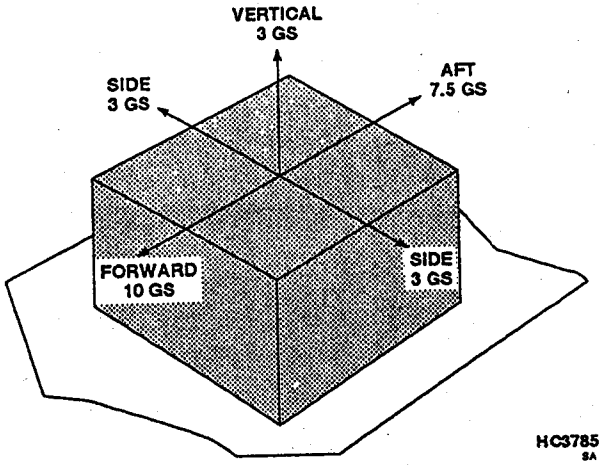

Figure 40. Restraint Criteria

Table 1. Restraint Chart (Sheet 1 of 3)

RESTRAINT CHART FOR 5,000-POUND TIEDOWN FITTINGS								
VERTICAL ANGLE								
RESTRAINT DIRECTION	SIDE ANGLE	0°	15°	30°	45°	60°	75°	90°
FWD-AFT		5000	4830	4330	3535	2500	1295	0
SIDE	0°	0	0	0	0	0	0	0
VERTICAL		0	1295	2500	3535	3535	3535	3535
FWD-AFT		4830	4665	4182	3415	2415	1250	0
SIDE	15°	1295	1250	1121	915	647	336	0
VERTICAL		0	1295	2500	3535	3535	3535	3535
FWD-AFT		4330	4182	3750	3061	2165	1120	0
SIDE	30°	2500	2415	2165	1767	1250	645	0
VERTICAL		0	1295	2500	3535	3535	3535	3535
FWD-AFT		3535	3415	3061	2499	1767	920	0
SIDE	45°	3535	3415	3061	2499	1767	920	0
VERTICAL		0	1295	2500	3535	3535	3535	3535
FWD-AFT		2500	2415	2165	1767	1250	645	0
SIDE	60°	4330	4182	3750	3061	2165	1120	0
VERTICAL		0	1295	2500	3535	3535	3535	3535
FWD-AFT		1295	1240	1121	915	647	336	0
SIDE	75°	4830	4665	4182	3415	2415	1250	0
VERTICAL		0	1295	2500	3535	3535	3535	3535
FWD-AFT		0	0	0	0	0	0	0
SIDE	90°	5000	4830	4330	3535	2500	1295	0
VERTICAL		0	1295	2500	3535	3535	3535	3535
NOTE: Vertical angles from 0° to 45° provide full rated strength of tiedown fittings.								

Table 1. Restraint Chart (Sheet 2)

RESTRAINT CHART FOR 10,000-POUND TIEDOWN FITTINGS								
VERTICAL ANGLE								
RESTRAINT DIRECTION	SIDE ANGLE	0°	15°	30°	45°	60°	75°	90°
FWD-AFT		7070	6829	6122	4998	3535	1831	0
SIDE	0°	0	0	0	0	0	0	0
VERTICAL		0	2590	5000	7070	7070	7070	7070
FWD-AFT		7070	6829	6122	4998	3535	1831	0
SIDE	15°	2590	2502	2243	1831	1295	670	0
VERTICAL		0	2590	5000	7070	7070	7070	7070
FWD-AFT		7070	6829	6122	4998	3535	1831	0
SIDE	30°	5000	4830	4330	3535	2500	1295	0
VERTICAL		0	2590	5000	7070	7070	7070	7070
FWD-AFT		7070	6829	6122	4998	3535	1831	0
SIDE	45°	7070	6829	6122	4998	3535	1831	0
VERTICAL		0	2590	5000	7070	7070	7070	7070
FWD-AFT		5000	4830	4330	3535	2500	1295	0
SIDE	60°	8660	8365	7499	6122	4330	2243	0
VERTICAL		0	2590	5000	7070	7070	7070	7070
FWD-AFT		2590	2502	2243	1831	1295	670	0
SIDE	75°	9660	9331	8365	6830	4830	2501	0
VERTICAL		0	2590	5000	7070	7070	7070	7070
FWD-AFT		0	0	0	0	0	0	0
SIDE	90°	10000	9660	8660	7070	5000	2590	0
VERTICAL		0	2590	5000	7070	7070	7070	7070
NOTE: Tiedown angles that provide full rated strength of tiedown fittings are: 0° to 45° vertical, and 45° to 90° side.								

Table 1. Restraint Chart (Sheet 3)

RESTRAINT CHART FOR 20,000-POUND TIEDOWN FITTINGS								
VERTICAL ANGLE								
RESTRAINT DIRECTION	SIDE ANGLE	0°	15°	30°	45°	60°	75°	90°
FWD-AFT		14140	13658	12244	9996	7070	3662	0
SIDE	0°	0	0	0	0	0	0	0
VERTICAL		0	5180	10000	14140	14140	14140	14140
FWD-AFT		14140	13658	12244	9996	7070	3662	0
SIDE	15°	5180	5004	4486	3662	2590	1340	0
VERTICAL		0	5180	10000	14140	14140	14140	14140
FWD-AFT		14140	13658	12244	9996	7070	3662	0
SIDE	30°	10000	9660	8660	7070	5000	2590	0
VERTICAL		0	5180	10000	14140	14140	14140	14140
FWD-AFT		14140	13658	12244	9996	7070	3662	0
SIDE	45°	14140	13658	12244	9996	7070	3662	0
VERTICAL		0	5180	10000	14140	14140	14140	14140
FWD-AFT		10000	9660	8660	7070	5000	2590	0
SIDE	60°	17320	16730	14998	12244	8660	4486	0
VERTICAL		0	5180	10000	14140	14140	14140	14140
FWD-AFT		5180	5004	4486	3662	2590	1340	0
SIDE	75°	19320	18662	16730	13660	9660	5002	0
VERTICAL		0	5180	10000	14140	14140	14140	14140
FWD-AFT		0	0	0	0	0	0	0
SIDE		90°	20000	19320	17320	14140	10000	5180
VERTICAL		0	5180	10000	14140	14140	14140	14140
NOTE: Tiedown angles that provide full rated strength of tiedown fittings are: 0° to 45° vertical and 45° to 90° side.								

160. TIEDOWN ANGLES. Restraint of cargo loads is required in five directions; forward, aft, side (both left and right) and vertical as shown in Figure 40. When a tiedown device is applied most effectively it will provide restraint in three of these directions. To accomplish this the tiedown divide is applied with both a vertical and a side angle. (Figure 41). The tiedown angles are very important, as they determine the amount of restraint that can be attained in any direction. A tiedown device applied between a tiedown ring and a point on the cargo load will provide restraint equal to the rating of the tiedown ring in the direction of the tiedown ring. If a vertical and a side angle are applied, the tiedown device will only provide its rated strength along its line of action; however, it will apply a lesser amount of restraint in three directions. Figure 41 illustrates a 10,000-pound device applied at a 30° vertical angle and a 30° side angle. This device will provide 6122 pounds of forward, 4330 pounds of side, and 5000 pounds of vertical restraint. Table 1 provides the restraint available in the forward-aft, side, and vertical directions obtained from a tiedown device applied at various vertical and side angles.

A.

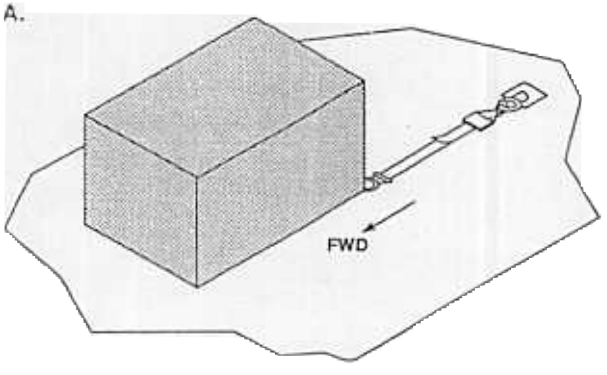

THIS TIEDOWN DEVICE IS INSTALLED WITH A 0° VERTICAL AND A 0° SIDE ANGLE. IT APPLIES FORWARD RESTRAINT ONLY.

B.

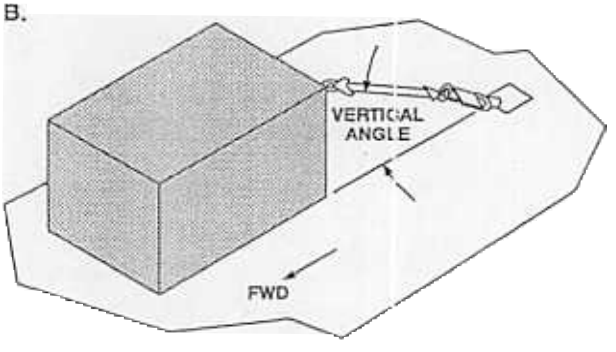

THE TIEDOWN DEVICE IS INSTALLED WITH A VERTICAL ANGLE AND NO SIDE ANGLE. IT APPLIES BOTH FORWARD AND VERTICAL RESTRAINT.

C.

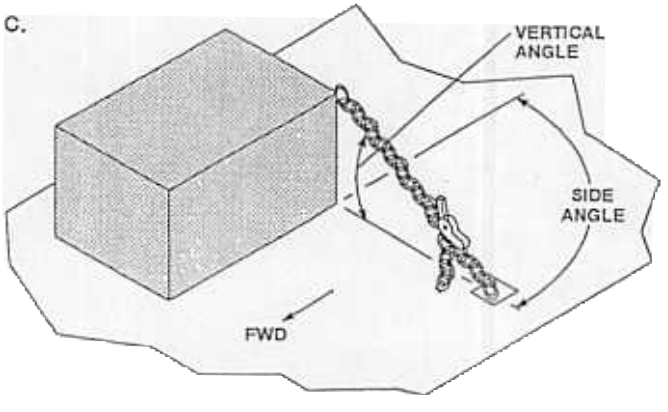

THIS TIEDOWN DEVICE IS INSTALLED WITH A VERTICAL AND A SIDE ANGLE. IT APPLIES FORWARD, VERTICAL AND SIDE RESTRAINT.

D.

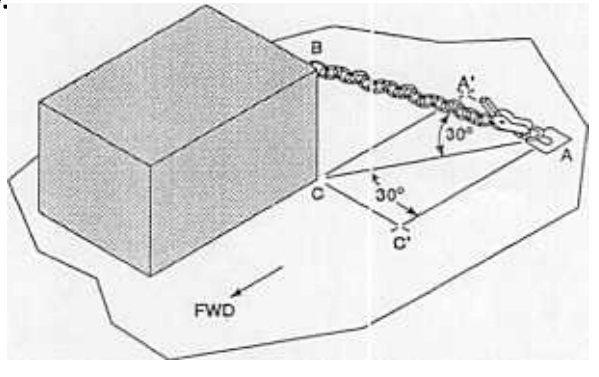

A 10,000-POUND TIEDOWN DEVICE INSTALLED AT A 30° VERTICAL AND A 30° SIDE ANGLE WILL PROVIDE 6122 POUNDS FORWARD RESTRAINT, 5000 POUNDS VERTICAL RESTRAINT, AND 4330 POUNDS SIDE RESTRAINT.

HC3786
SA

Figure 41 Tiedown Restraint

161 Formulas for Determining Restraint Provided by Tiedown Fittings. When a tiedown device is applied between the floor fitting and a cargo load, it is normally applied with a vertical and a side angle. A tiedown applied in this manner applies a restraint in three directions (forward or aft, side, and vertical). The rated strength value of the tiedown fitting, however, is along the line of action of the tiedown device; therefore, this value must be resolved into forward or aft, side, and vertical component to determine the amount (percentage) of restraint provided in each direction. Two formulas are used to determine these restraint values:

a. Side adjacent to tiedown angle = hypotenuse × cosine of tiedown angle.

b. Side opposite tiedown angle = hypotenuse × sine of tiedown angle.

162 A percentage of restraint provided by a tiedown device can be determined based on these trigonometric formulas. See Table 2 for trigonometric functions. The values of Table 1 are determined using these formulas (note that angles must be within the acceptable cone of action of Figure 5).

TABLE 2. Table of Trigonometric Functions

ANGLE	SINE	COSINE
0	.000	1.000
5	.087	.996
10	.174	.985
15	.259	.966
20	.342	.940
25	.423	.906
30	.500	.866
35	.574	.819
40	.643	.766
45	.707	.707
50	.766	.643
55	.819	.574
60	.866	.500
65	.906	.423
70	.940	.342
75	.966	.259
80	.985	.174
85	.996	.087
90	1.000	.000

163 For example, to find the strengths available for the tiedown device shown in Figure 41(D) with a side angle of 30° and a vertical angle of 30°, determine the following:

164 Strength available for forward restraint is determined in two steps. To determine forward restraint without consideration for side angle substitute the following in formula a:

A'C = A'B × Cos BA'C

a. A'C is the side adjacent to the tiedown angle and represents the strength of the tiedown device which is available for forward restraint. A'B is the hypotenuse and represents the restraint available along the line of the tiedown device which is 100% of the rated tiedown strength. BA'C, the angle between the tiedown device and the line the cargo force is directed, is 30°. Therefore

A'C = 100% ×. 866
A'C = 86.6%

b. 86.6% of the rated strength is available for forward restraint of cargo if there were no lateral angle A'CA. To determine the influence of the side angle substitute the following in formula a:

AC = A'C × Cos ACA'

c. A'C is already calculated as 86.6% of rated strength and angle ACA' is 30°. However the angle ACA' is not within the acceptable cone of action (Figure 5) and 45° must be used in the formula for minimum acceptable side angle. Therefore

AC = 86.6% × .707
AC = 61.22°

d 61.22° of a 10,000 pound tiedown restraint is 6122 pounds of forward restraint.

165 To find the vertical restraint in the tiedown device substitute the following formula b:

BC = AB × Sin BAC

a. BC is the strength available for vertical restraint. AB represents 100° of the rated tiedown strength. BAC represents the tiedown angle of 30°. Therefore

BC = 100° × .500
BC = 50°

b. 50° of the 10,000-pound tiedown restraint is 5000 pounds of vertical restraint.

166 To find the side restraint in the tiedown device substitute the following in formula a:

C'C = A'C × Sin CAC'

a. C'C is the strength available for side restraint. A'C represents 86.6% of the rated tiedown strength. BAC represents the tiedown angle of 30°. Therefore

C'C = 86.6% × .500
C'C = 43.3%

b. 43.3% of the 10,000 pound tiedown restraint is 4330 pounds of side restraint.

167. Table 1 restraint chart for 10,000 pound tiedown fittings shows the same restraint capabilities.

168. GENERAL RULES FOR APPLICATION OF TIEDOWN DEVICES. The greatest amount of restraint is required in the forward and aft directions; therefore the vertical angle should be as small as possible, but large enough to provide the required vertical restraint. Side restraint criteria is much less than forward and aft restraint criteria; therefore the side angles can be relatively small but within the cone of action of the tiedown rings. Vertical restraint should normally be no problem as all of the tiedown devices used for forward and aft, and side restraint are providing some vertical restraint as long as they are connected to the cargo load at some vertical angle.

169. The following general rules should be used, whether or not the cargo is equipped with tiedown fittings:

a. Determine number of tiedown devices required to provide required restraint in all directions.

b. Always apply an even number of tie-down devices attached in pairs for forward and aft restraint and on opposite sides for side restraint.

c. Check restraint by reference to Table 1

d. After applying all required tiedown devices, especially on cargo not equipped with tiedown devices, check that load will not slip. Additional tiedowns may be necessary to prevent load slippage.

170. COMPUTATION OF TIEDOWN REQUIRED. Determine the restraint requirements and number of tiedown devices necessary to tie down a 4000-pound crate. For illustrative purposes, the tiedown fittings used will all be rated at 10,000 pounds and the tiedown devices used shall all be applied at c 45° side angle and a 15° vertical angle.

a. Determine restraint requirements:
FWD restraint = 4000 lbs. × 10 Gs = 40,000 lbs.
AFT restraint = 4000 lbs. × 7.5 Gs = 30,000 lbs.
SIDE restraint = 4000 lbs. × 3 Gs = 12,000 lbs.
VERTICAL restraint = 4000 lbs. × 3 Gs = 12,000 lbs.

b. Determine number of tiedown devices required for forward restraint at specified angle, and side and vertical restraint provided by these devices. From Table 1, determine that forward restraint provided at specified angle to 6829 pounds, side restraint is 6829 pounds, and vertical restraint is 2590 pounds.

Forward restraint: 40,000 lbs. required ÷ 6829 lbs. per device = 5.8
= 6 devices required
Three of these devices will provide side restraint in one direction and three will provide restraint in the opposite direction.
Side restraint provided = 3 devices × 6829 lbs. = 20,487 lbs.
Vertical restraint will be provided by all six devices.
Vertical restraint = 6 devices × 2590 lbs. = 15,546 lbs.

c. Determine the number of tiedown devices required for aft restraint at the specified angle, and the side and vertical restraint provided by these devices.

Aft restraint:
30,000 lbs. required ÷ 6829 lbs. per device = 4.4 = 6 devices required.
Three of these devices will provide side restraint in one direction and three will provide restraint in the opposite direction.
Side restraint provided = 3 devices × 6829 lbs. = 20,487 lbs.
Vertical restraint will be provided by all six devices.
Vertical restraint = 6 devices × 2590 lbs. = 15,546 lbs.

d. Determine total side restraint and vertical restraint provided by 12 tiedown devices used to provide forward and aft restraint.
Total side restraint provided = 20,487 lbs. + 20,487 lbs. = 40,974 lbs.
This exceeds the required side restraint of 12,000 pounds; therefore no additional tiedown devices are required for side restraint.
Total vertical restraint provided = 15,546 lbs. + 15,546 lbs.= 31,092 lbs.
This exceeds the required vertical restraint of 12,000 pounds; therefore no additional tiedown devices are required for vertical restraint.

171. METHODS OF RESTRAINING CARGO. There are two basic methods of applying tiedowns to restrain cargo. The method used depends upon whether or not the cargo has tiedown provisions. Cargo with no tiedown provisions is restrained by passing the tiedown devices (straps) over or around the cargo and attaching both ends of the tiedown device to the tiedown fittings in the cargo floor. Cargo with tiedown provisions is restrained by attaching one end of the tiedown device to the tiedown fittings in the cargo floor, and the other end of the tiedown device to the tiedown point on the cargo.

172. RESTRAINT OF CARGO WITH NO TIEDOWN PROVISIONS. Many cargo loads carried will consist of a variety of containers. This type of cargo must be secured by passing tiedown devices over and around the cargo. When cargo is restrained in this manner, there are three factors that must always be kept in mind:

a. Amount of restraint. A tiedown device placed around an item of cargo will provide restraint equal to the effective strength of the device and/or the tiedown fitting in the direction it prevents the cargo from moving. The individual devices applied will provide restraint in one direction only. Figure 43 has a restraining device applied against movement in each direction; forward, aft, left, right, and vertical.

b. Length and tiedown angle of the tiedown devices. A tiedown device generally should always be as short as possible and follow as closely as possible the contour of the cargo it is securing, to minimize slippage. When there are more than two devices in the fore-and-aft direction the tiedown angle of additional devices on the aft side of the cargo should be changed to 45°, to obtain additional protection against any tendency of the cargo to tumble forward. This procedure is particularly important when tying down tall items and composite loads consisting of several containers that are stacked (Figure 44). In arranging composite loads, cargo should not be stacked so that it is top-heavy. The height of a composite load should not be greater than its length in the longitudinal direction, if it can be avoided. Nets (Figure 45) may be used to provide adequate tiedown devices and to minimize slippage of c omposite cargo.

c. Shift of cargo. Since the tiedown devices are not actually attached to the cargo, care must be taken to insure that the load cannot slip out from under the tiedown devices. This is especially true when several items are tied down together. After the correct number of tiedowns have been applied to provide the required restraint, the load should always be checked to see if any part of it can slip free. In many instances where several items are tied down together, it may be necessary to add additional tiedowns to completely secure the load.

173. RESTRAINT OF CARGO WITH TIEDOWN PROVISIONS. Vehicles, special shipping containers, and some items of equipment are provided with rings or other suitable points to which cargo tiedown devices can be attached. This type of cargo should be secured as shown in Figure 45. When cargo is secured by attaching tiedown devices directly to the cargo, there are two factors that must be kept in mind:

a. Applied restraint. A tiedown device, attached between a tiedown ring or point on an item of cargo and a tiedown fitting in the cargo floor, will provide restraint

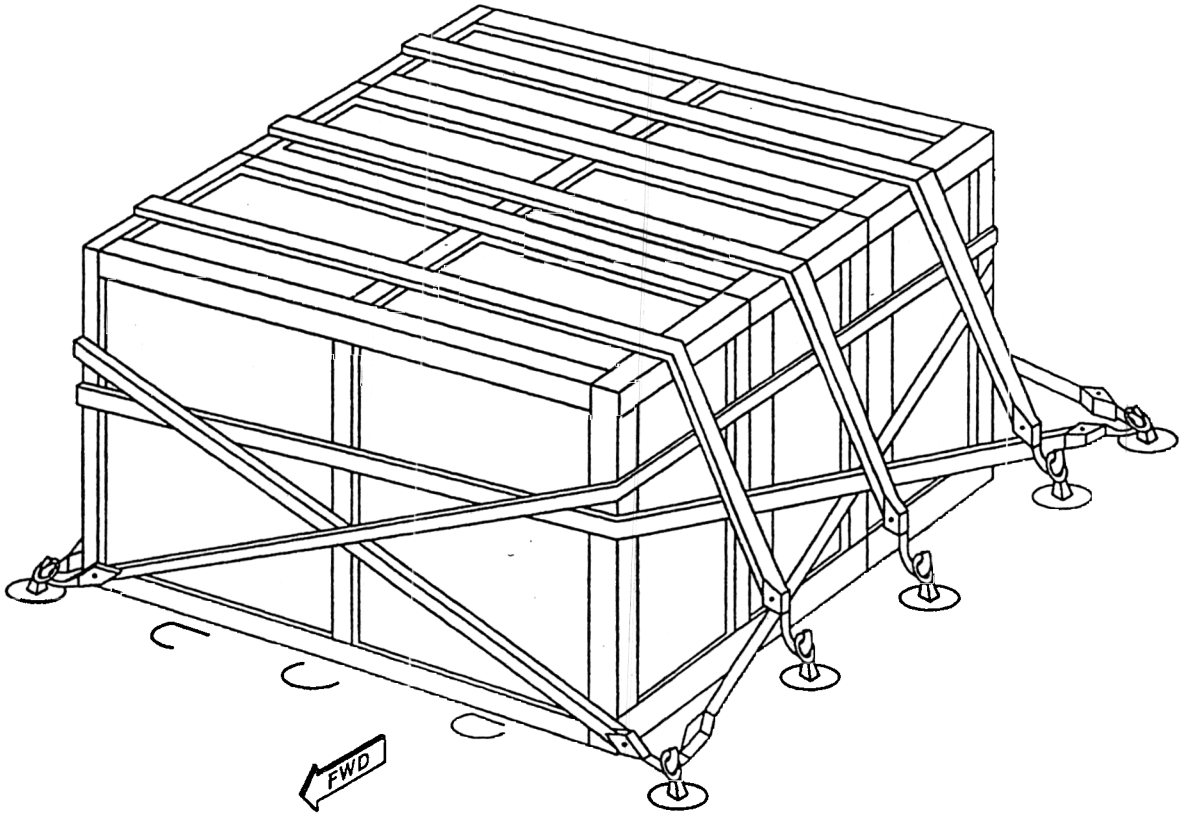

HC3787
SA

Figure 42. Tiedown Device Application to Cargo with No Tiedown Provisions

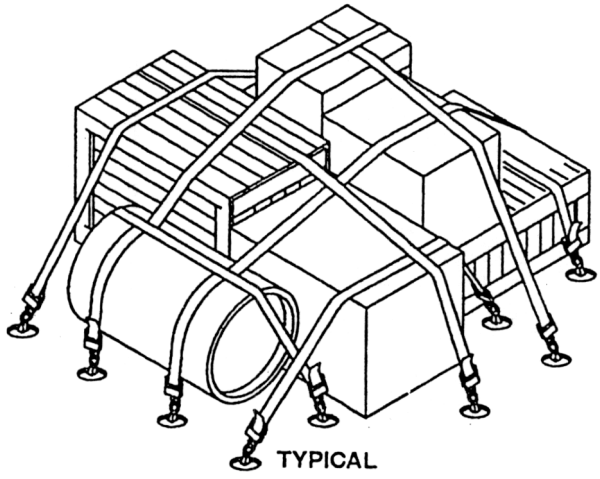

Figure 43 Composite Cargo Load with No Tiedown Provisions

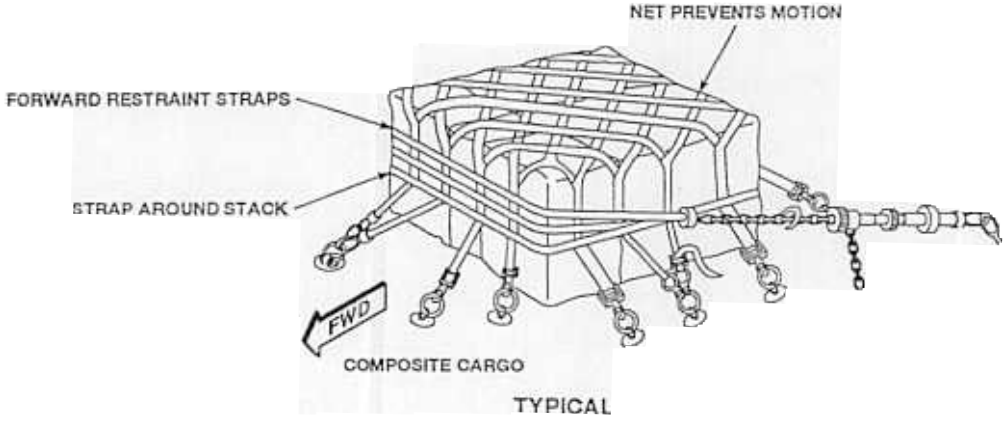

Figure 44. Composite Cargo Load with Net

equal to the strength of the tiedown fitting in the direction of the tiedown device. In practice, however, it is not feasible to attach tiedown devices purely in the direction in which restraint is required because of the location of the tiedown provisions on the cargo. Most tiedowns out of necessity must be attached at an angle to the desired direction of restraint, and consequently only a part of the effective strength of the tiedown will be available to provide restraint in the desired direction.

b. Tiedown angle. The tiedown angle is very important and must be considered since it determines the amount of restraint which can be obtained in any direction. To minimize the number of tiedowns, the tiedowns should be applied with both a vertical and a side angle in order to provide restraint in three directions.

174. TIEDOWN DEVICE OPERATION. For operation of tiedown devices see Figure 46. The capacity of a tiedown device is limited to the capacity of the tiedown fitting and strength of the cargo attaching points.

175. VEHICLE TIEDOWN. Vehicle tiedowns must consider restraint for the sprung and unsprung portions of the vehicle separately. The sprung portion of the vehicle consists of everything above the springs, such as frame, body, cab, load bed, and any cargo in the vehicle. Cargo is considered separately and must be fastened to the vehicle. The unsprung portion of the vehicle consists of everything below the springs, such as the wheels, axles, and springs. See Figure 47 for methods of restraining sprung and unsprung loads. When applying tiedown devices, do not permit them to chafe hydraulic lines, fuel lines, tires, or electrical wiring. Attach devices to tow hooks, tiedown rings, bumper supports, or frame members. Do not attach devices to steering mechanism, tie rods, drive shaft, headlights, grills, and fender brackets.

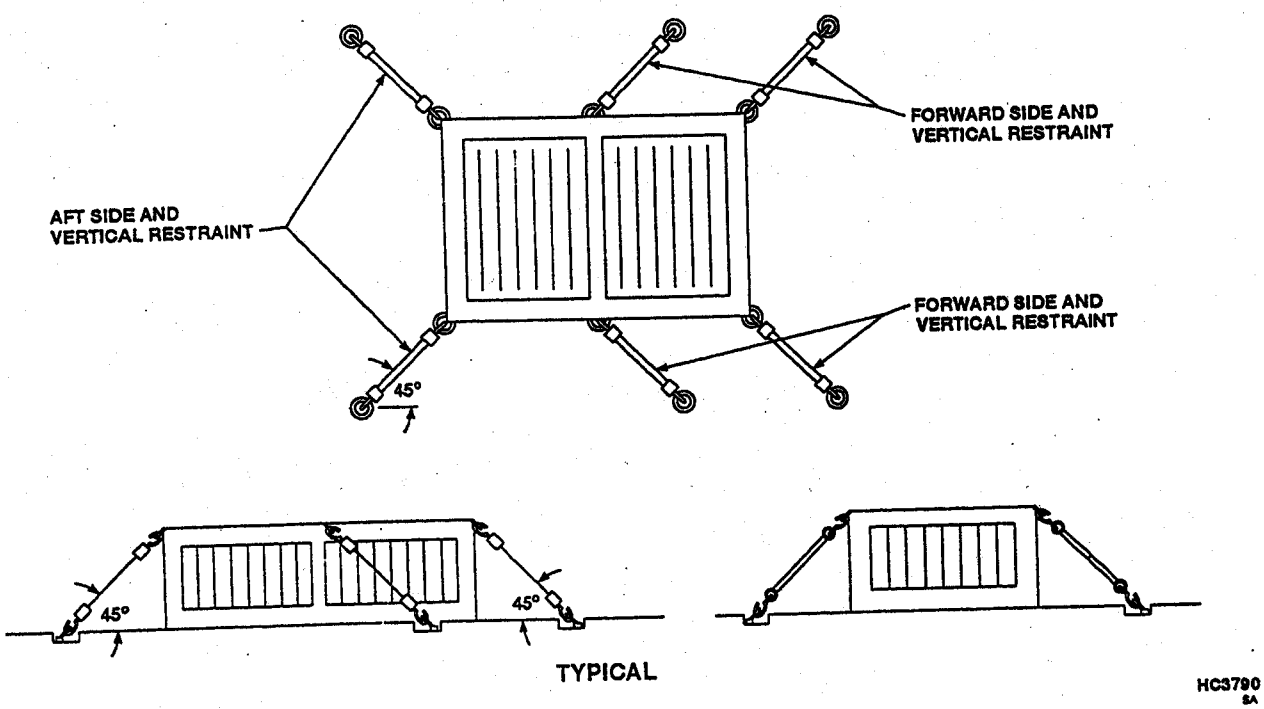

Figure 45. Tiedown Device Application to Cargo with Tiedown Provisions

176. OFFLOADING. Offloading procedures are similar to loading procedures previously described in this section. Offloading of cargo can be expedited by assembling necessary unloading aids in the area of the cargo compartment, where they will be used to unload and restore the helicopter to flight condition. The equipment required for offloading is essentially the same as that required for loading a specific load and, if it is kept aboard, usually no additional equipment is required. The ramp may be lowered manually, but if winches or lighting is needed the rotor must be turning to drive the accessory gear box, or the APP must be operating. Before attempting to move cargo loads, all tiedown devices should be released. The tiedown devices and any other equipment not required for unloading should be moved to an area where they will not hinder offloading operations. Wheeled vehicles may be pushed or winched aft to the beginning of the ramp but before reaching the inclined ramp they should be restrained by the winch system to guide the vehicle straight down the ramp. Palletized loads or other equipment on the roller conveyors may be handled in the same manner. If the loads on the roller conveyors are light they may be pushed out manually and allowed to roll down the ramp, as the guide rails will keep them in alignment.

177. GENERAL CARGO OFFLOADING.

178. Before the Helicopter has come to a stop:

a. Connect snatch block fittings at lower end of ramp.

b. Reel out cable and pass through snatch block pulleys and connect to pallets or vehicles.

c. Open personnel door and lower ramp.

NOTE

Do not open ramp below level attitude when helicopter is taxiing.

179. After the Helicopter has come to a stop:

a. Lower ramp to desired attitude.

b. Remove or lower flippers as desired.

c. Release all tiedown devices.

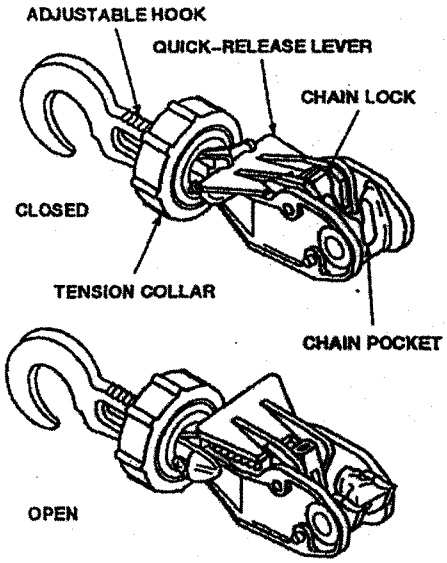

MB-1 10,000-POUND CAPACITY TIEDOWN DEVICE AND MB-2 25,000-POUND CAPACITY TIEDOWN DEVICE

1. EXTEND ADJUSTABLE HOOK BY ROTATING TENSION COLLAR.
2. INSERT CHAIN IN CHAIN POCKET.
3. PUSH CHAIN DOWN UNTIL IT BOTTOMS AND IS SECURED BY THE CHAIN LOCK.
4. ROTATE TENSION COLLAR UNTIL CHAIN IS TIGHT.
5. TO RELEASE DEVICE UNDER LOAD PULL UP ON QUICK-RELEASE LEVER.

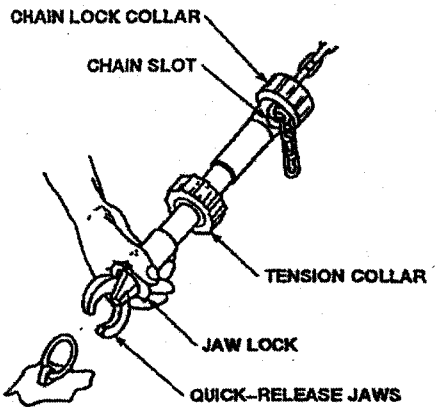

C2 10,000-POUND CAPACITY TIEDOWN DEVICE

1. TURN JAW LOCK TO OPEN QUICK-RELEASE JAWS.
2. TURN JAW LOCK TO CLOSE JAWS ON THE TIEDOWN FITTING.
3. TURN CHAIN LOCKING COLLAR TO EXPOSE CHAIN SLOT. DRAW UP CHAIN UNTIL SNUG AND INSERT IN SLOT.
4. TURN CHAIN LOCKING COLLAR TO LOCK CHAIN.
5. ROTATE TENSION COLLAR TO TIGHTEN CHAIN.

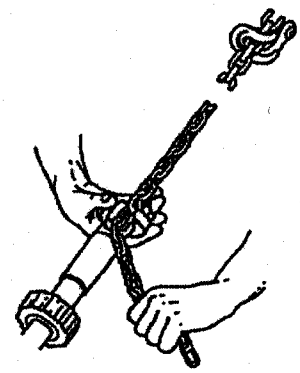

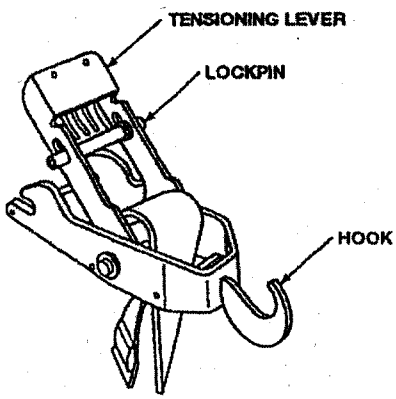

MC-1 5,000-POUND CAPACITY TIEDOWN DEVICE

1. ATTACH TIEDOWN DEVICE TO TIEDOWN FITTING.
2. MOVE LOCKPIN AWAY FROM HOOK END TO FREE TENSIONING LEVER.
3. PULL FREE END OF STRAP UNTIL DEVICE IS TAUT.
4. PLACE TENSIONING CLAMP IN LOCK POSITION.

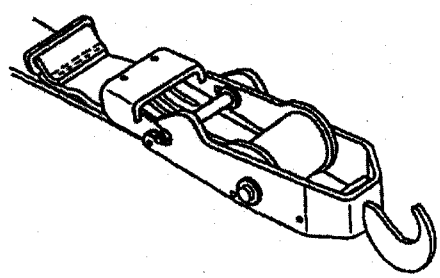

TYPICAL

HC3791_1

Figure 46. Cargo Tiedown Device Operation (Sheet 1 of 2)

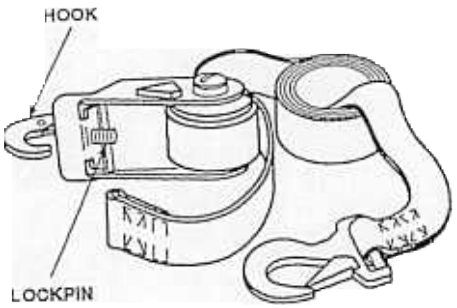

CGU-1/B
5,000-POUND CAPACITY
TIEDOWN DEVICE

1. ATTACH HOOK TO TIEDOWN FITTING.
2. OPEN UNIT AND PULL WEBBING THROUGH CYLINDER.
3. WORK RATCHET TO TIGHTEN WEBBING.
4. LOCK HANDLE IN POSITION IN DIRECTION OF HOOK.
5. LOOSEN BY SQUEEZING SPRING LOADED LOCKPIN IN RATCHET HANDLE AND PULL WEBBING.

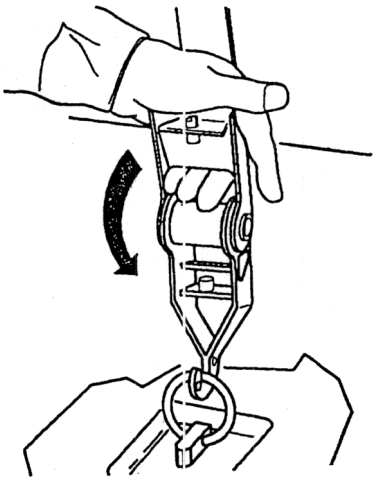

10,000 POUND
CAPACITY TIEDOWN DEVICE

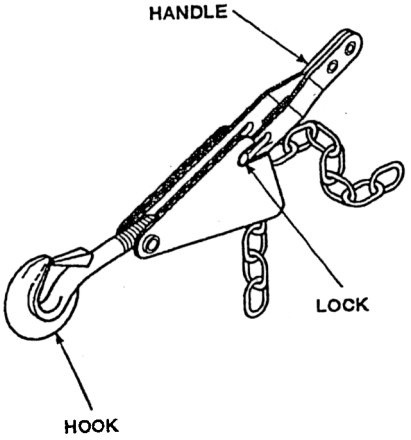

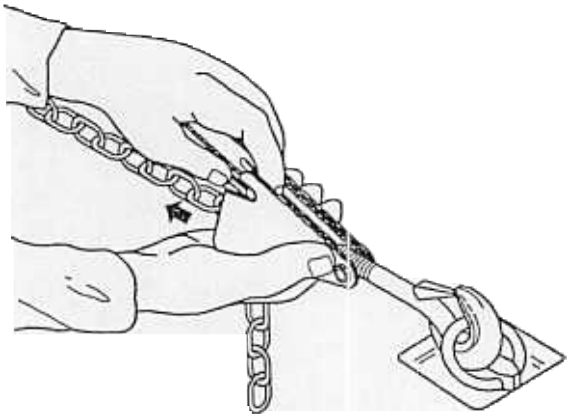

20,000 POUND
CAPACITY TIEDOWN DEVICE

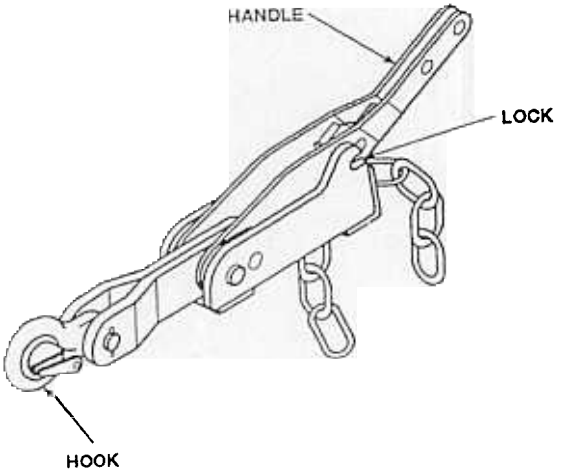

1. ATTACH HOOK TO TIEDOWN FITTING.
2. PULL LOCK BACK AND RAISE HANDLE.
3. PULL CHAIN TAUT AND PLACE FREE END IN CHAIN SLOT (NOT SHOWN).
4. LOCK CHAIN BY PRESSING DOWN ON HANDLE.

TYPICAL

HC3791_2
SA

Figure 46. Cargo Tiedown Device Operation (Sheet 2)

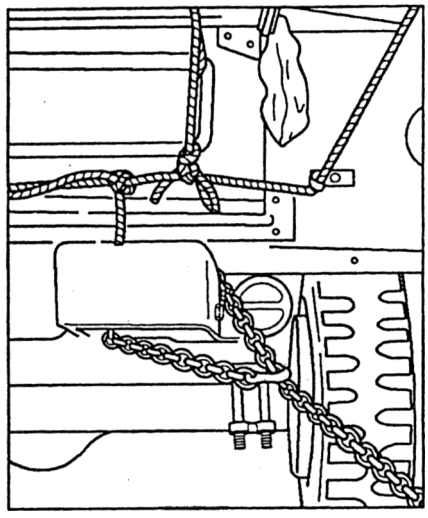

AROUND REAR BUMPERETTE (SPRUNG)

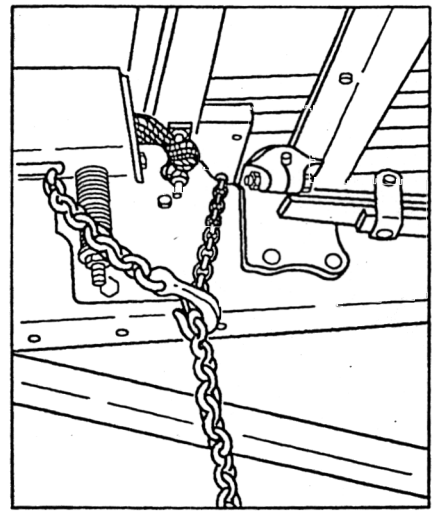

OVER FRAME AND UNDER CROSS MEMBER (SPRUNG)

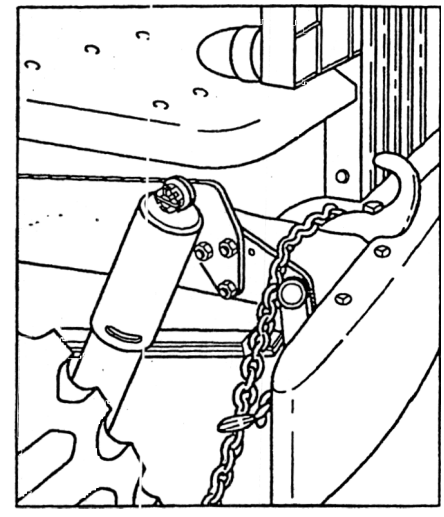

AROUND FRAME, AFT OF BUMPER (SPRUNG)

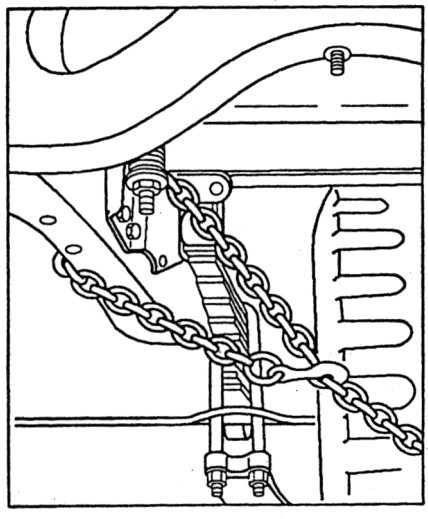

AROUND FRAME (SPRUNG)

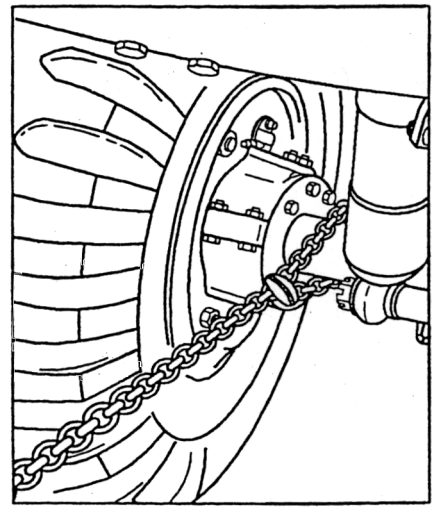

AROUND AXLE (UNSPRUNG)

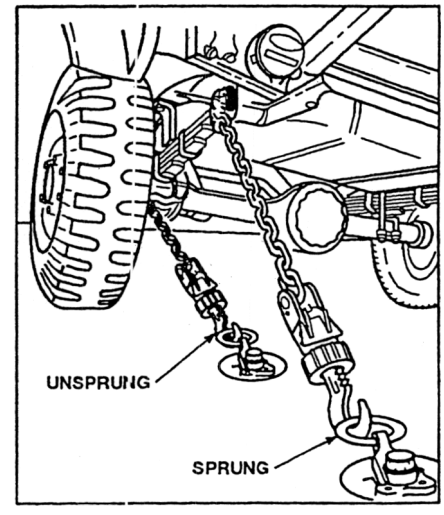

TIEDOWNS ATTACHED TO FLOOR FITTINGS

TYPICAL

HC3792
SA

Figure 47 Tiedown Application

d. Winch or push pallets or vehicles out of cargo compartment and down ramp.

e. Vehicles may be driven out.

f. Helicopter may be taxied forward to slide pallets to the ground, or removed with forklift.

180. TROOP OFFLOADING. After the helicopter has come to a stop:

a. Lower ramp when directed by Aircraft Commander.

b. Direct troops to unfasten seat belts and exit through right side of ramp (left side facing aft).

NOTE

Recover troop vests, cranial helmets, and sound attenuators before troops exit helicopter.

c. Notify Aircraft Commander when troops are off.

d. Extend and mate seat belts for easy use if next mission is troop lift. Fold or remove troop seats, depending on requirements of next mission.

181. LITTER OFFLOADING. After the helicopter has come to a stop:

a. Lower ramp when directed by pilot.

b. Remove litters from helicopter by reversing loading procedure.

c. Disengage litter support locking bars by pulling down on outer locking handle to release inner locking handle. Pull inner locking handle to release locking bar.

182. AFTER OFFLOADING. When offloading operations are completed, the cargo compartment should be cleaned and prepared for the next mission. Winch cables should be reeled in, the roller conveyor-skid strips should be positioned with the required side facing upward and troop seats should be installed, folded or removed depending upon the requirements of the next mission.

183 EMERGENCY PROCEDURES.

184. EMERGENCY EXITS. Emergency exit operation varies in the H-53 model helicopter. All emergency handles are painted orange-yellow. Emergency exit instructions are stenciled in yellow paint. Emergency exits, including routes of escape, are shown in Figure 48.

185. Pilot's Compartment Windows. The windows may be jettisoned to provide emergency exits by turning counterclock-wise the manual emergency release handles, marked EMERGENCY EXIT PULL OUT AND TURN, at the bottom of each window inside the pilot's compartment. The windows can be jettisoned by turning the release handle and pushing out on the window. The windows can also be released for emergency exit from the outside by turning the handle, marked EXIT RELEASE-PRESS BUTTON-TURN, counterclockwise.

186. Personnel Door. The door is on the right forward side of the helicopter. The door is divided into upper and lower sections, which may be opened and closed from either side by the handle marked TO OPEN-TURN. The handle also locks the upper section of the door open if needed for in-flight operation. The upper section may be jettisoned from either side by turning both handles on the upper section and moving it in. To open the lower section of door from outside, turn handle counterclockwise. To open the lower section of door from inside, turn handle clockwise.

187. Cabin Emergency Escape Hatch. The hatch on the left forward side of the cabin may be jettisoned to provide emergency exit. (The MH-53E also has cabin emergency hatches in place of the rear left and right cabin windows.)

WARNING

In CH-53A, CH-53D, and RH-53D helicopters, the cabin emergency escape hatch may be removed on the ground but is not designed to be opened or removed in flight except for the purpose of intentional jettison in case of an emergency due to the possibility of contact with the tail rotor or sponson.

The hatch is jettisoned by turning clockwise the release handle marked EXIT RELEASE-PRESS-TURN. The hatch may also be opened from the outside by turning counterclockwise the release handle marked EXIT RELEASE-PRESS-TURN. On the CH-53E and MH-53E, the hatch can be hinged open for routine use by turning the lower handle clockwise and swinging the hatch inboard and up. The entire hatch can be removed for emergency exit by turning the upper handle clockwise and pulling the hatch inboard. The hatch can be removed from the outside by turning the handle below the hatch counterclockwise and pushing the hatch in.

188. Cabin Windows. Six cabin windows, three on each side, may be removed for emergency exits. The forward cabin windows (left and right) are not on MH-53E helicopters. Each window has EMERGENCY EXIT stenciled above it. Each cabin window has a pull tab, marked PULL TAB, by which the locking strip may be pulled out of the rubber seal surrounding the window. The windows may then be forcibly pushed out against the window retainers for emergency exit. Some helicopters are modified to provide a handle or strap for pulling the window inward after the locking strip is removed.

189. Cargo Door Window. The cargo door has a window marked EMERGENCY EXIT, which may be used as an emergency exit. The window has a pull tab, marked PULL TAB, by which the locking strip may be pulled out of the rubber seal surrounding the window. The panel may then be forcibly pushed out, or pulled inward if the helicopter is modified, to provide a pull handle or strap.

NOTE

On CH-53E and MH-53E helicopters the single-point cargo hatch may be used as an exit, should an emergency situation warrant.

190. EMERGENCY EQUIPMENT (Figure 49). Emergency equipment and location may vary by H-53 model.

191. Portable Fire Extinguisher. A portable CO_2 or CF_3Br fire extinguisher is on the forward cabin bulkhead on the right of the pilots' compartment entrance door. On CH-53E and MH-53E helicopters the fire extinguisher is mounted below the crewman's seat. The fire extinguisher is held in place by a bracket with a tight-fitting quick-release spring or lever.

192. First Aid Kits. One first aid kit is mounted on the bulkhead behind the copilot's seat. A second first aid kit is mounted on the forward cabin bulkhead to the right of the pilots' compartment entrance door.

193. Visual-Aural Debark System. The CH - 53A, CH - 53D, and RH - 53D helicopters have a visual aural

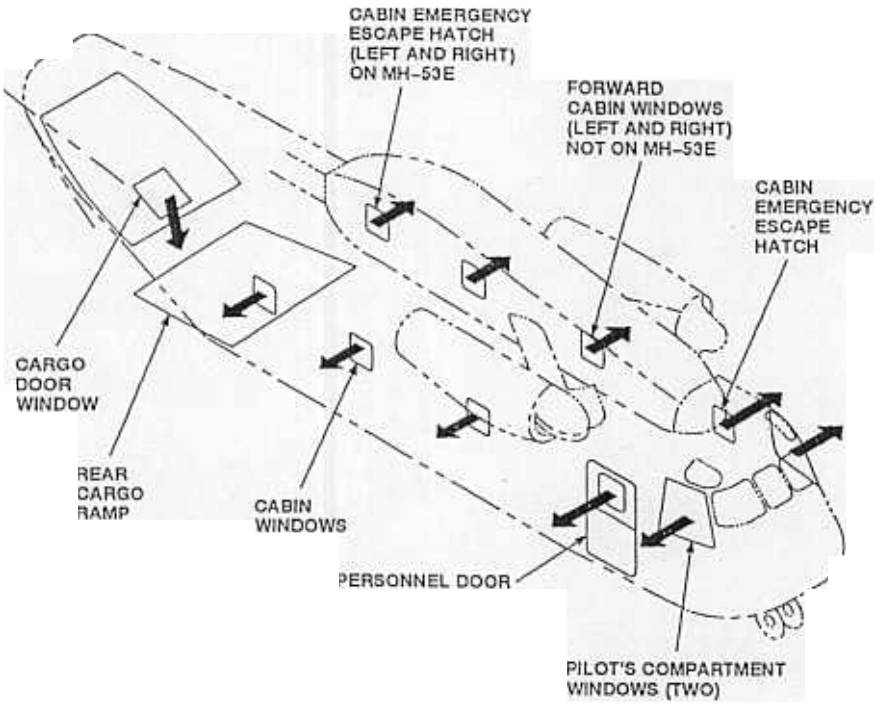

Figure 48. Emergency Exits and Entrances

debark system installed to provide both visual and aural signals to warn occupants in case of an emergency. The visual-aural debark system consists of a control panel, on the pilot's overhead control panel; a horn, in the cabin ceiling; and a signal box, on the forward cabin bulkhead by the pilot's compartment entrance door. The system is so designed that occupants may be visually or aurally alerted to either standby, debark, or that an emergency exists. Cargo compartment occupants are alerted visually by the lighting of the words DEBARK or STDBY on the signal box, and aurally by a horn which emits a broken aural signal when the DEBARK light is on, or a continuous aural signal when the STDBY light is on. For an emergency, the EMERGENCY light goes on and the horn emits an interrupted signal.

194. Emergency Exit Lights. Five removable emergency exit lights, four installed in the cabin above an emergency exit and one installed on the aft cabin wall above the ramp opening, have a self-contained battery that will cause the light to go on whenever dc electrical power to it is interrupted. The lights may be removed from the helicopter in case of an emergency evacuation by pulling on the handle marked PULL, at the top of each light. When the light is removed, a switch on the light housing is actuated, causing the light to operate on battery power. Once the light is removed, it may be turned off by pushing the handle in, and turned on again by pulling the handle out. The MH-53E has an additional four cabin emergency lights, one above the forward cabin door and each of the three cabin escape hatches. They light automatically when the helicopter's dc electrical system fails, upon impact of 10 Gs, or when immersion switches at floor level are immersed in water (salt or fresh).

195. EMERGENCY OPERATIONS.

196. Emergency Descent and Ground Landing. Passengers should remain strapped in their seats during emergency descent and landing, and follow the directions of the crewmembers. After landing, when the rotor has stopped turning, unstrap and depart the helicopter by any emergency exit.

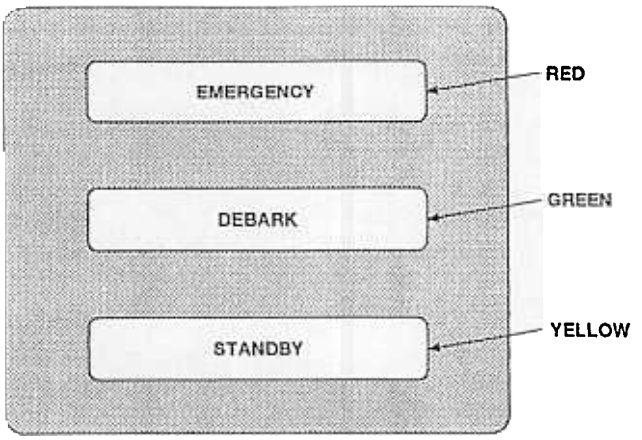

DEBARK SYSTEM VISUAL SIGNAL BOX

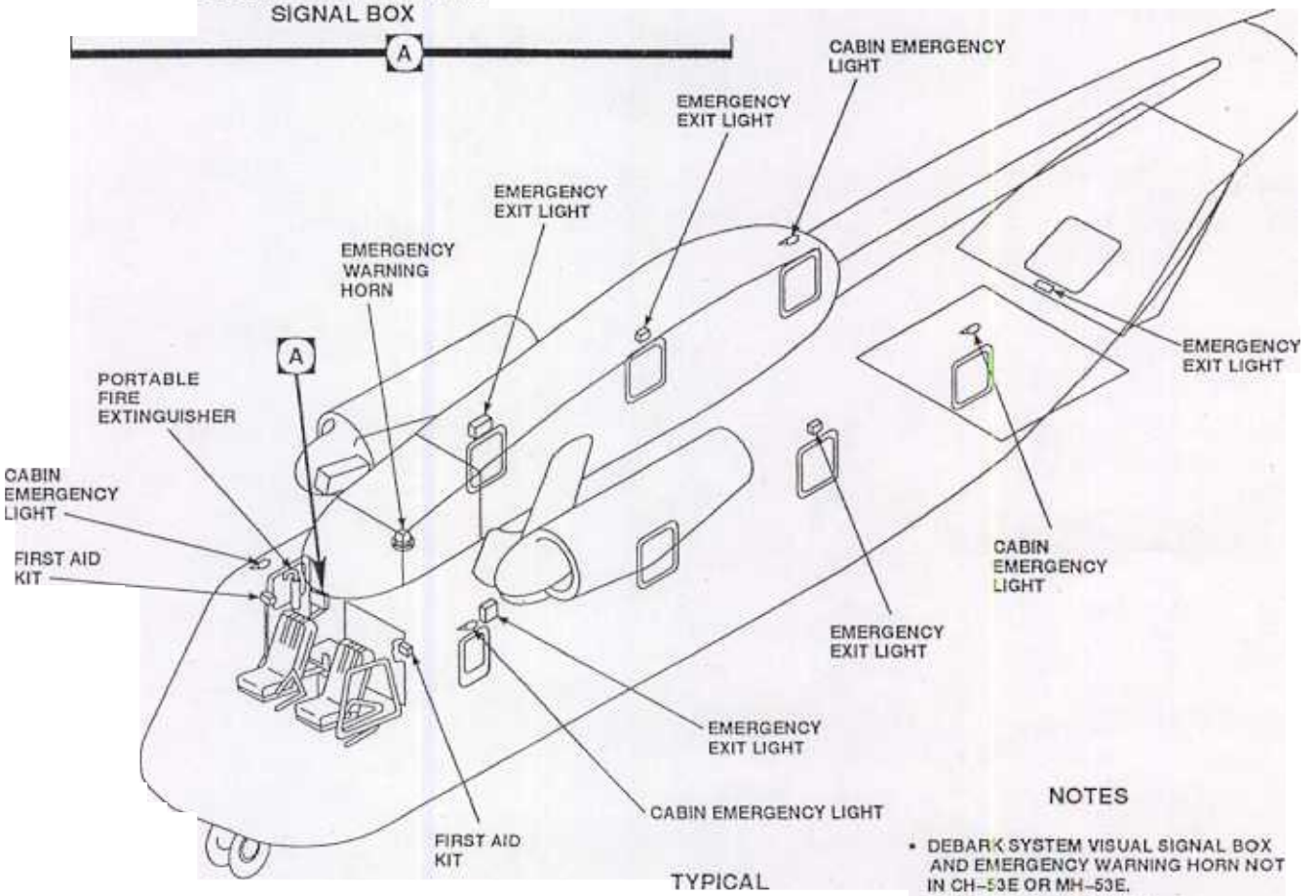

NOTES

- DEBARK SYSTEM VISUAL SIGNAL BOX AND EMERGENCY WARNING HORN NOT IN CH-53E OR MH-53E.
- EMERGENCY EXIT LIGHTS DETACHABLE.
- PORTABLE FIRE EXTINGUISHER UNDER AIRCREWMAN'S SEAT IN CH-53E AND MH-53E.
- CABIN EMERGENCY LIGHTS IN MH-53E ONLY.

HC3794
5A

Figure 49. Emergency Equipment

197. Emergency Water Operations.

CAUTION

For watertight integrity, all doors, hatches, and the cargo ramp (or dam installed) must be closed during all water operations.

The helicopter is configured with water-tight hull and sponsons to permit emergency water landings with ability to stay afloat for about 2 hours in 1- to 3-foot waves with a wind of 7 - 16 knots.

Ditching/Abandoning Helicopter.

WARNING

Swim well clear of helicopter to prevent being struck by rotor blades or other parts of the sinking helicopter.

Passengers should remain strapped in their seats during emergency descent and landing, and follow the directions of the crewmembers. See Figure 50 for evacuation exits on water.

199. Helicopter Floating on Surface. When crewmember directs to abandon helicopter, unstrap, deploy life rafts, and abandon helicopter.

200. Helicopter Does Not Float or Rolls Over. Remain strapped in until rotors stop. Abandon helicopter and do not inflate life vest until clear of helicopter.

NOTE

If time permits, launch rafts through any escape point.

If helicopter is inverted, use of the single-point suspension hatch in the CH-53E and MH-53E should be considered for exit.

201. Bailout. Bailout is recommended only if it is impossible to make an emergency landing. Bailout from the ramp is possible either in level flight or autorotation. A crewmember will normally function as jumpmaster and direct orderly abandonment of the helicopter. When directed, step off the ramp, arms close to body, and head down. Wait until clear of the helicopter before pulling ripcord, to avoid fouling the parachute.

WARNING

Bailout through any exit other than the ramp is not recommended, due to possible contact with sponsons or rotor blades.

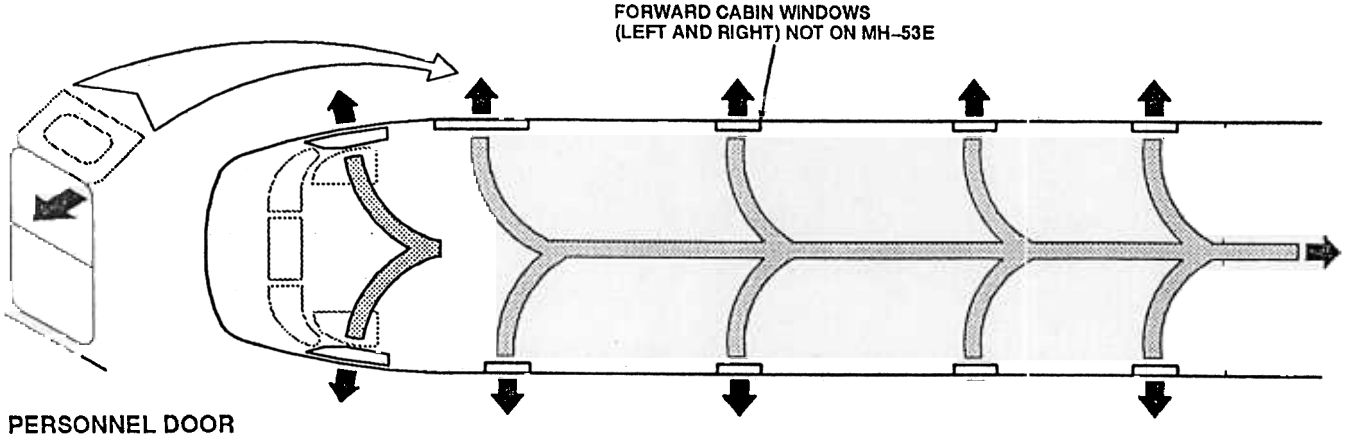

HC3795
SA

Figure 50. Evacuation Exits on Water