MICROFILMED 31 JAN 1989

BELVOIR RESEARCH, DEVELOPMENT AND ENGINEERING CENTER

CMPTR REQUEST NO 8HE3570
PCN D38MEF00846

CMPTR RUN DATE 01/09/89
PAGE 001 OF 002

PARTS LIST FOR	REV	DOC DATE	DOC SYM	R SC	FSCM
PL13226E0230	D	07 OCT 88		L U	97403
CAB ASSEMBLY					

FIND NO	FSCM	PART OR IDENTIFYING NO OR SPECIFICATION NO	GFP OPT	QTY	NAME/ DESCRIPTION OR NOTE	DOC SYM	R	S C
	97403	D13226E0230		REF	CAB ASSEMBLY		L	U
1	97403	D13226E0240		001	CAB CONSTRUCTION		L	U
2	97403	C13226E0317-1		001	SEAL WINDOW	C	U	U
3	97403	C13226E0317-2		001	SEAL WINDOW	C	U	U
4	97403	C13226E0636		002	WINDOW FRONT		U	U
5	97403	C13226E0351		001	PLUG ELEC 2 PIN	S	U	U
6	97403	C13226E0238		001	ADAPTER SCHLT FTG		L	U
7	16834	IFI-STD-513		003	METRIC MACH SCREW M6 X 1 X 15 PAN HEAD CLASS A2-70 ASTM F738			
8	96906	MS15795-809		011	WASHER FLAT-METAL, ROUND GENERAL PURPOSE .250 ID X .562 OD X .065 THKNS CRES PSVT			
9	80204	ANS-B18.16.3M		011	METRIC HEX NUT DIM PREVAILING-TORQUE M6 X 1 CLASS A2-70 IFI-517 CRES			
10	97403	D13226E0293		001	SEARCHLIGHT	A	U	U
11	81349	MIL-S-8802		AR	SEALING COMPOUND CLASS B-2 OR B1/2			
12	97403	D13226E0294-1		001	WIPER WINDSHIELD	S	U	U
13	80204	ANS-B18.2.3.1M		008	METRIC HEX CAP SCR HEX HD M6 X 1.00-25HHC CLASS A2-70 ASTM F738			
16	97403	C13226E0637		002	WINDOW SIDE		U	U
17	97403	D13226E0247		001	RAIL HAND CAB		L	U
18	96906	MS20600B6W4		011	RIVET BLIND, STRUCTURAL PULL STEM, SELF-PLUGGING, PROTRUDING HEAD, TYPE I 3/16 NOM DIA X .188 TO .250 GRIP RANGE SERR STEM AL ALY 5056 ANOZ OR CHEM TRTD			
19	97403	C13226E0357		001	CASE AND CAP SOCKET	S	U	U
20	97403	C13226E0356		001	SOCKET ELEC FLANGED	S	U	U
21	16834	IFI-STD-513		003	METRIC MACH SCREW M4 X 0.7 X 16 PAN HEAD CLASS A1-70 ASTM F738			
22	96906	MS15795-841		003	WASHER FLAT-METAL, ROUND GENERAL PURPOSE .188 ID X .438 OD X .049 THKNS CRES PSVT			
23	80204	ANS-B18.16.3M		003	METRIC HEX NUT DIM PREVAILING-TORQUE M4 X 0.7 CLASS A1-70 IFI-517 CRES			
24	97403	C13226E0237		001	BASE SCHLT FITTING		L	U
25	97403	C13226E0301-2		004	RIVET BLIND	C	U	U

SH	ZONE	LTR	STATUS OF REVISIONS: DESCRIPTION	DATE	APPROVED
A		A	SEE ECP NO. 83HE0038	8 APR 83	[illegible]
A		B	SEE ECP NO. 84HE0840 AND 84HE0841	17 JUL 85	[illegible]
C		C	SEE ECP NO. 85CE1305 AND 85CE1396-R2	25 Feb 86	[illegible]

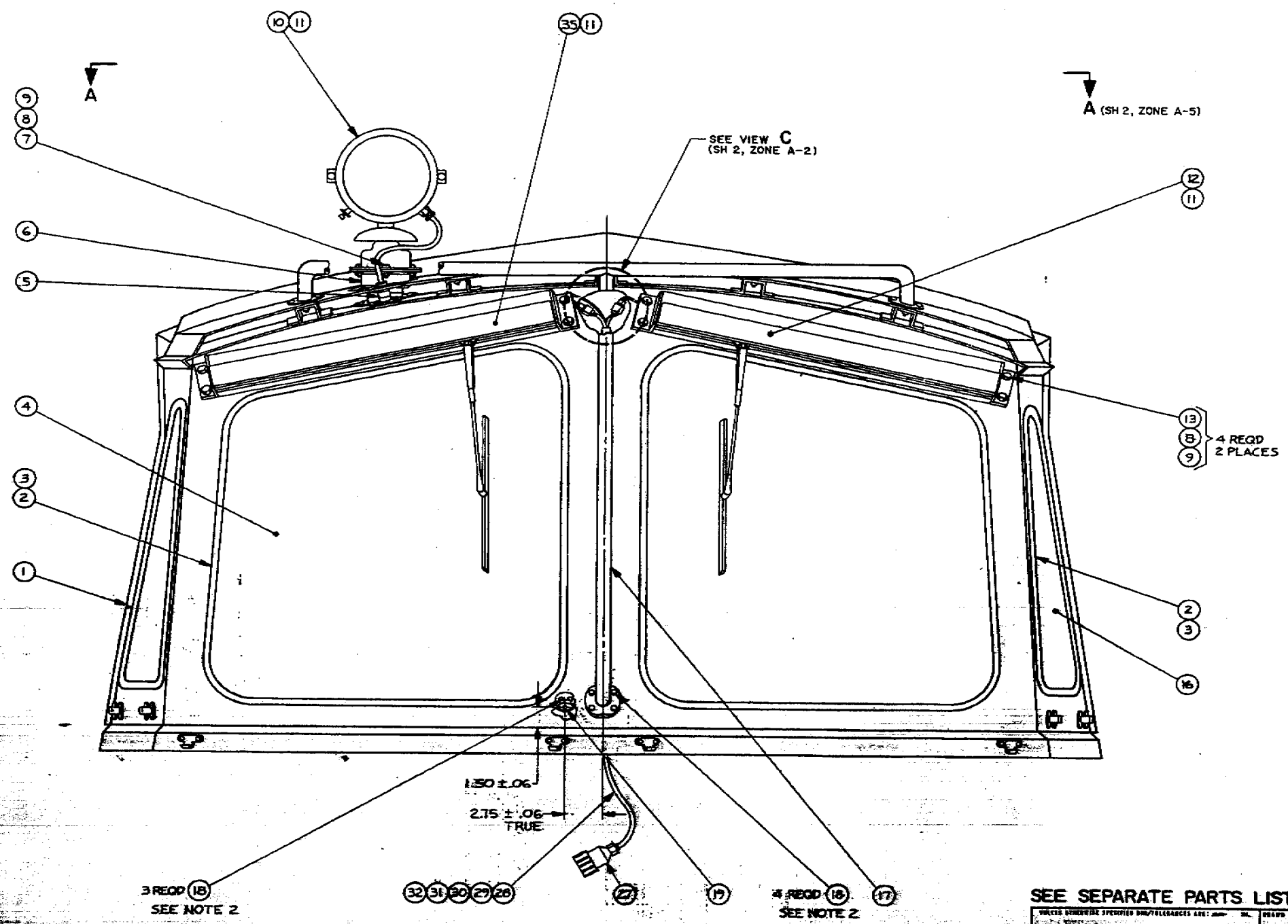

NOTES:

1. RIVETING SHALL BE IN ACCORDANCE WITH 13217E1061, CLASS 2.
2. PROVIDE HOLES .191/.198 DIAMETER FOR RIVET, FIND NO. 18 AND 26, USING RAIL, HAND, CAB, FIND NO. 17 OR SOCKET, FIND NO. 19 AS TEMPLATE.
3. PROVIDE HOLES .156/.166 DIAMETER FOR SCREW, FIND NO. 21, USING SOCKET, SEARCHLIGHT, FIND NO. 20 AS TEMPLATE.
4. PROVIDE HOLES .264/.276 DIAMETER FOR MONOBOLT, FIND NO. 25, USING BASE, SEARCHLIGHT FITTING, FIND NO. 24 AS TEMPLATE.
5. INSTALL MONOBOLT, FIND NO. 25, IN ACCORDANCE WITH MANUFACTURERS INSTRUCTIONS.
6. CUT OFF SHAFT OF SEARCHLIGHT, FIND NO. 10 TO OBTAIN DIMENSION SHOWN WITH .50/.62 OF SHAFT INSIDE HANDLE.
7.
8. STRIP END OF INDIVIDUAL CONDUCTORS .22-.28.
9. INSTALLED TERMINALS, FIND NO. 33 AND 34, SHALL MEET THE PERFORMANCE REQUIREMENTS OF MIL-STD-454, REQUIREMENT 19.
10. APPLY SEALING COMPOUND, FIND NO. 11, TO DESIGNATED AREAS PRIOR TO BOLTING OR RIVETING.

SEE SEPARATE PARTS LIST

DRAWN BY TRR	DATE 27 NOV 82	U.S. ARMY MOBILITY EQUIPMENT RESEARCH AND DEVELOPMENT COMMAND FORT BELVOIR, VIRGINIA 22060
CHECKED BY [illegible]	DATE 19 APR 82	CAB ASSEMBLY
CONTRACT NO.		
DESIGN APPROVAL [illegible] DATE 15 Jun 82		
APPROVED FOR ENGINEERING R. E. Hall DATE 13 Jun 82		SIZE A1 · CODE 97403 · DWG NO. 13226E0230 · SHEET 1 OF 2

ZONE	LTR	REVISIONS DESCRIPTION	DATE	APPROVED
	A	SEE ECP NO. 83HE0038	8APR83	SHR
	C	SEE ECP NO. 85CE1305 AND 85CE1396-R2	25SEP 22	RAS

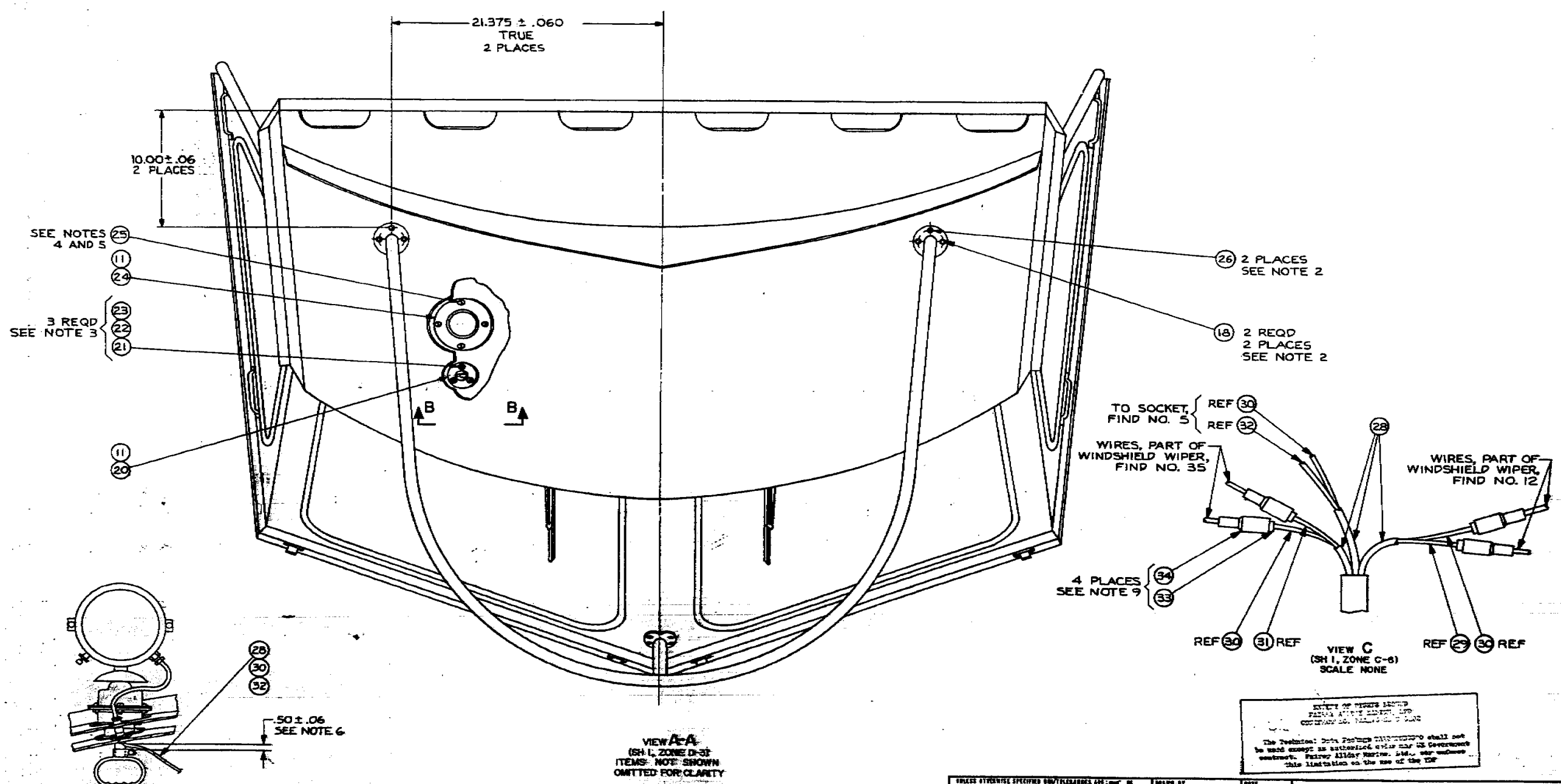

The Technical Data Package information shall not be used except as authorized under the US Government contract. Fairey Hiller Marine, Inc. may waive this limitation on the use of the TDP

U.S. ARMY MOBILITY EQUIPMENT RESEARCH AND DEVELOPMENT COMMAND
FORT BELVOIR, VIRGINIA 22060

DRAWN BY: RLS — DATE: 23 NOV 81
CHECKED BY: — DATE: 19 APR 82
CONTRACT NO.
DESIGN APPROVAL: John H. Hart — DATE: 15 June 82
APPROVED FOR PRODUCTION: R. E. Hill — DATE: 15 June 82

CAB ASSEMBLY

SIZE: A1 — FSCM: 97403 — DWG NO.: 13226E0230 — SHEET 2

SHEETS 7	6	5	4	3	2	ZONE	LTR	STATUS OF REVISIONS DESCRIPTION	DATE	APPROVED
–	A	A	A	A	A		A	SEE ECP NO. 87CE0065, 86CE0106R3, R4 AND R5	[illegible]	[illegible]
–	B	A	A	A	A		B	SEE ECP NO. 87CE0478	[illegible]	[illegible]
–	B	C	A	A	A		C	SEE ECP NO. 85CE1297C1	[illegible]	[illegible]
D	D	D	D	D	D		D	SEE ECP NO. 88CE0382 AND 88CE3507	[illegible]	[illegible]
D	D	E	E	E	E		E	SEE ECP NO. 86CV0297R2	[illegible]	[illegible]
F	F	E	F	E	E		F	SEE ECP NO. 93HE3057	[illegible]	[illegible]
F	F	E	F	E	E		G	SEE ECP NO. 92HE3087	93-04-27	[illegible]

NOTES:

1. UNLESS OTHERWISE SPECIFIED CAB IS SYMMETRICAL ABOUT CENTER LINE.
2. TREAT AND PAINT IN ACCORDANCE WITH MIL-T-704, TYPE 6.
3. WELDING SHALL BE IN ACCORDANCE WITH 13216E8320, CLASS 1, TYPE III.
4. RIVETING SHALL BE IN ACCORDANCE WITH 13217E1061, CLASS 1.
5. UNLESS OTHERWISE SPECIFIED, ALL INSIDE BEND RADII SHALL BE .125 R MINIMUM.
6.
7. PROVIDE HOLES .191/.199 DIAMETER FOR RIVET, FIND NO. 18, HANDLE, FIND NO. 13 AS TEMPLATE.
8. OPTIONAL MATERIAL: ASTM B209, ALY 5083-O.
9. OPTIONAL MATERIAL: ASTM B221, ALY 5083-O.
10. BEND RELIEFS ARE PERMISSIBLE AND ARE TO BE WELDED WITH METAL AND GROUND FLUSH AFTER FINAL ASSEMBLY.
11. ALUMINUM 6061-T6 ASTM B210 MAY BE USED AS AN OPTIONAL MATERIAL FOR FIND NO. 2, 8 AND 9.

FIND NO.	FSCM	CODE IDENT	PART OR IDENTIFYING NUMBER	QTY	NOMENCLATURE OR DESCRIPTION	SPECIFICATION	MATERIAL
20			ALY 5086-H32	1	SHEET, .125 STK	ASTM B209	AL ALY
19			ALY 5086-H32	1	SHEET, .125 STK	ASTM B209	AL ALY
18			9438C617A1MC18S02M	AR	SHEET, .063 STK X 1.00 WIDE	ASTM-B2000	RUBBER
17			–	AR	ADHESIVE, RUBBER BASE, GENERAL PURPOSE, TYPE II	MMM-A-1617	
16			ALY 6063-T52	2	ANGLE, SHARP CORNER, 1.00 X .75 X .125 STK SEE NOTE 9	ASTM B221	AL ALY
15			ALY 6063-T52	2	CHANNEL, SHARP CORNER, 1.00 X 1.00 X .125 STK SEE NOTE 9	ASTM B221	AL ALY
14			MS20600 SERIES	2 PER	RIVET, 0.1900 DIA X .281 TO .312 GRIP		AL ALY
13			13226E0580	1 EACH	HANDLE, LIFTING		
12			ALY 5083-O	2 PER	SHEET, 1002 STK	ASTM B209	AL ALY
11			ALY 5083-O	2	SHEET, 1002 STK	ASTM B209	AL ALY
10			ALY 5083-O	1 PER	SHEET, 1002 STK	ASTM B209	AL ALY
9			ALY 6061-T6	1 PER	TUBE, 1.00 OD X .125 WALL STK (SEE NOTE 11)	ASTM B221	AL ALY
8			ALY 6061-T6	1 PER	TUBE, 1.00 OD X .125 WALL STK (SEE NOTE 11)	ASTM B221	AL ALY
7			MS20000 SERIES	AR PER	RIVET, 0.1900 DIA X .188 TO .250 GRIP		AL ALY
6			13226E0580-1	4 EACH	CLOSURE, LEAVING ADJUSTABLE		
5			ALY 5083-O	1 PER	SHEET, 1002 STK	ASTM B209	AL ALY
4			ALY 5083-O	1 PER	SHEET, 1002 STK	ASTM B209	AL ALY
3			ALY 5083-O	1 PER	SHEET, 1002 STK	ASTM B209	AL ALY
2			ALY 6061-T6	1 PER	TUBE, 1.00 OD X .125 WALL STK (SEE NOTE 11)	ASTM B221	AL ALY
1			ALY 5086-H32	1 PER	SHEET, .125 STK SEE NOTE 9	ASTM B209	AL ALY

U.S. ARMY MISSILE COMMAND
RESEARCH AND DEVELOPMENT CENTER
FORT BELVOIR, VIRGINIA 22060

CAB CONSTRUCTION

SIZE	FSCM	DWG NO
A1	97403	13226E0581

SCALE 1/4 | SHEET 1 OF 2

DISTRIBUTION STATEMENT A
APPROVED FOR PUBLIC RELEASE
DISTRIBUTION IS UNLIMITED

13226E0581_97403_DP_E_0002_0001_U_N
March 19, 2002 3:04 PM

ZONE	LTR	DESCRIPTION	DATE	APPROVED
	A	SEE ECP NO. 86CE0106R4 AND R5	[illegible]	[illegible]
	D	SEE ECP NO. 88CE3507	[illegible]	[illegible]
	E	SEE ECP NO. 86CV0297R2	[illegible]	[illegible]

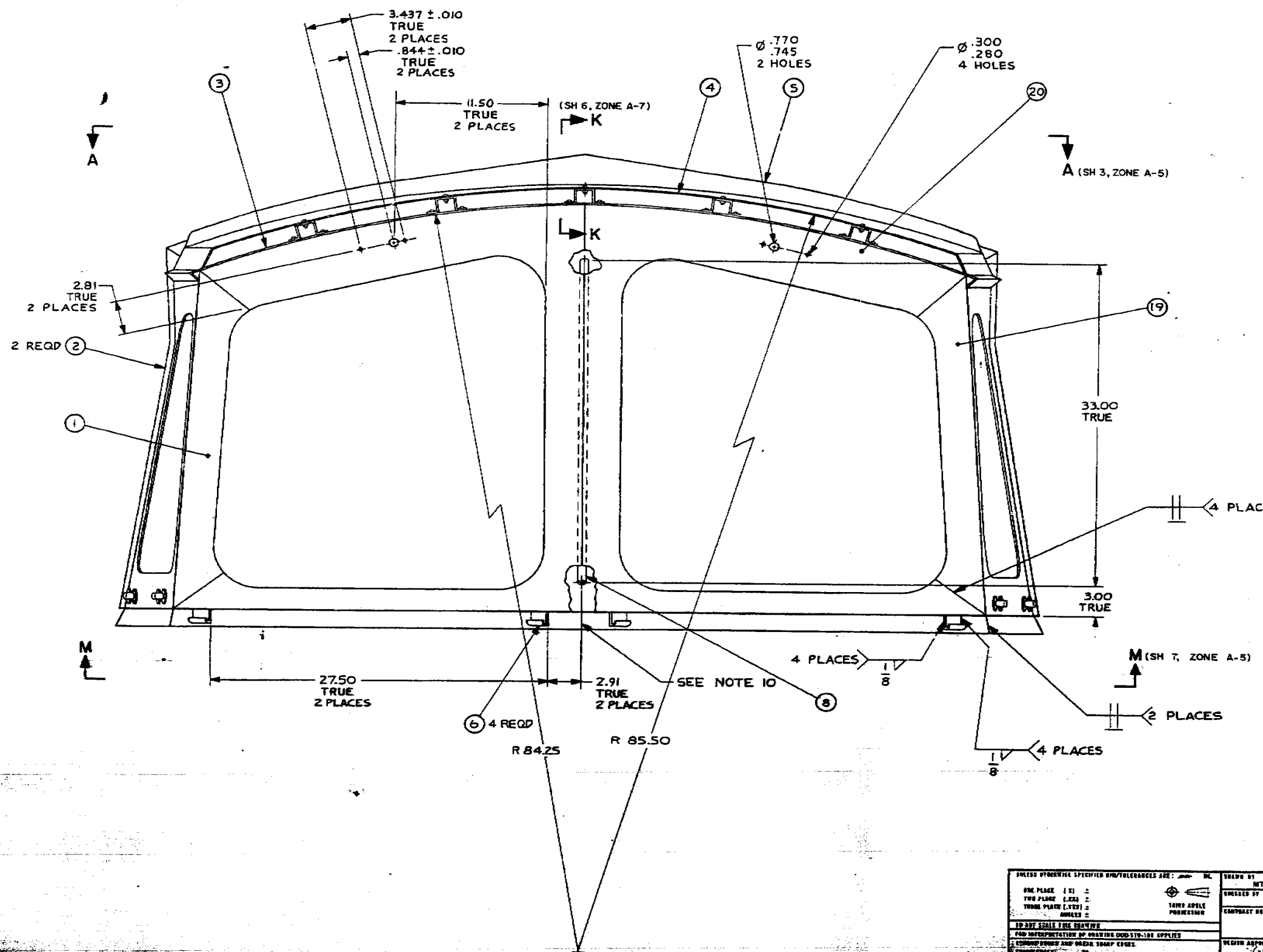

UNLESS OTHERWISE SPECIFIED DIM/TOLERANCES ARE: IN. ONE PLACE (.X) ± TWO PLACE (.XX) ± THREE PLACE (.XXX) ± ANGLES ± THIRD ANGLE PROJECTION	DRAWN BY MT/F	DATE 23 JUL 86	U.S. ARMY MOBILITY EQUIPMENT RESEARCH AND DEVELOPMENT COMMAND FORT BELVOIR, VIRGINIA 22060
DO NOT SCALE THIS DRAWING	CHECKED BY		CAB CONSTRUCTION
FOR INTERPRETATION OF DRAWING DOD-STD-100 APPLIES	CONTRACT NO.		
REMOVE BURRS AND BREAK SHARP EDGES.	DESIGN APPROVAL		
FINISH	DATE 26 Sep 86		SIZE A1 / FSCM 97403 / DWG NO. 13226E0581
MATERIAL	APPROVED FOR PROCUREMENT		SCALE / SHEET 2
	DATE 26 Sep 86		

13226E0581 97403_DP_D_0003_0001_U_N
March 19, 2002 3:07 PM

ZONE	LTR	DESCRIPTION	DATE	APPROVED
	A	SEE ECP NO. 87CE0065	17 Apr 87	[illegible]
	D	SEE ECP NO. 88CE3507	26 Sep 88	[illegible]

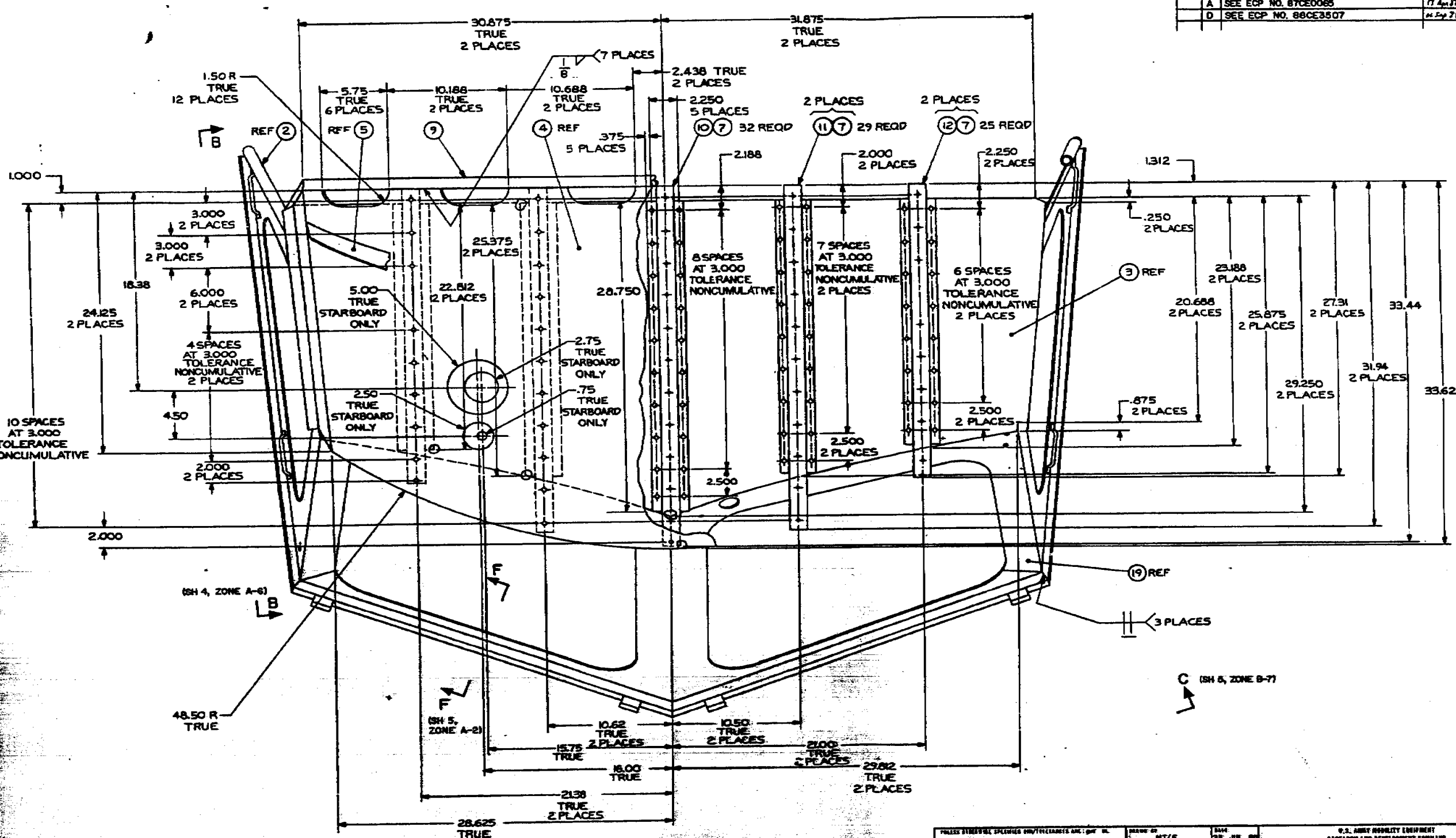

UNLESS OTHERWISE SPECIFIED DIM/TOLERANCES ARE: [illegible]	DRAWN BY MT/F	DATE 23 JUL 86
ANG PLACE: ±.5° ±.	CHECKED BY	
TWO PLACE: ±.03° ±.	CONTRACT NO.	
THREE PLACE: ±.005° ±.	DESIGN APPROVED [illegible]	U.S. ARMY MOBILITY EQUIPMENT RESEARCH AND DEVELOPMENT COMMAND FORT BELVOIR, VIRGINIA 22060
ANGLES ±.	DATE 26 Sep 86	
THIRD ANGLE PROJECTION	APPROVED FOR PRODUCTION [illegible]	CAB CONSTRUCTION
DO NOT SCALE THIS DRAWING	DATE 26 Sep 86	
FOR INTERPRETATION OF DRAWING AND SPECIFICATION APPLICABLE		SIZE A1 / CODE 97403 / DWG NO. 13226E0581
REMOVE BURRS AND BREAK SHARP EDGES.		SCALE: / SHEET 3
SHARP EDGE: TO		
FILLET RADIUS: TO		
MATERIAL		

13226E0581_97403_DP_F_0004_0001_U_N
March 19, 2002 3:07 PM

ZONE	LTR	DESCRIPTION	DATE	APPROVED
	A	SEE ECP NO. 87CE0065	13 Apr 87	RAS
	D	SEE ECP NO. 88CE3607	[illegible]	RAS
	E	SEE ECP NO. 95CV0297R2	[illegible]	[illegible]
	F	SEE ECP NO. 93HE3067	26 Mar 93	[illegible]

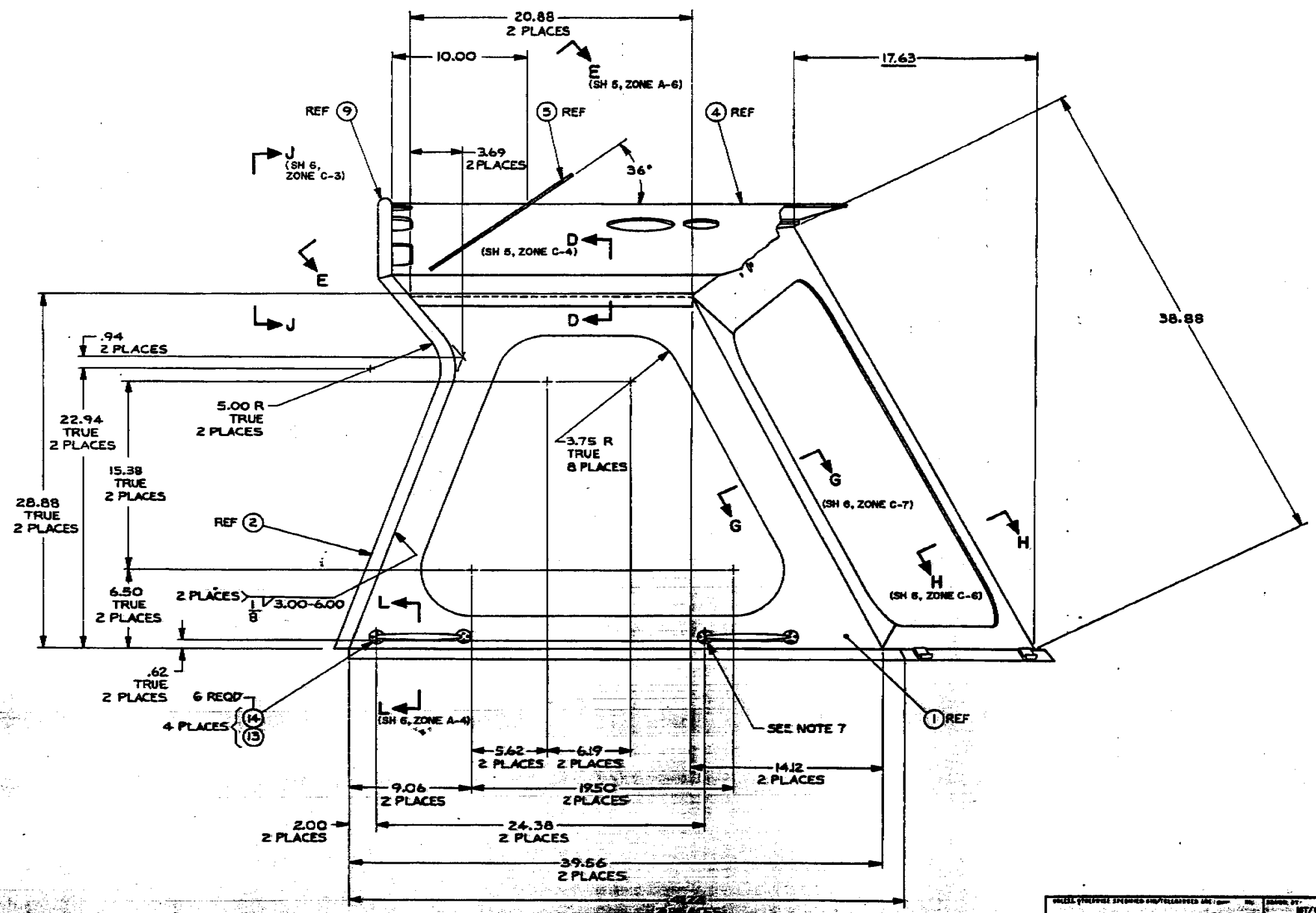

UNLESS OTHERWISE SPECIFIED SHR/TOLERANCES ARE:
ONE PLACE ± .1 DEG.
TWO PLACE ± .25
THREE PLACE ± .125
SURFACE ROUGHNESS
DO NOT SCALE THIS DRAWING
FOR DISTRIBUTION OF MARKED DOD-STD-100 APPLIES
FINISH
BREAK SHARP EDGES
PRIMARY
SECONDARY
ROTATION

DRAWN BY: HT/P
DATE: 23 JUL 86
DESIGNED BY:
PROJECT NO.
DESIGN APPROVAL
DATE: 26 Sep 86
APPROVED FOR PRODUCTION
DATE: 26 Sep 86

U.S. ARMY PROJECT MANAGER
FORT BRAGG, NORTH CAROLINA

CAB CONSTRUCTION

SIZE	FSCM	DWG NO.
A1	97403	13226E0581

SCALE | SHEET 4

13226E0581 97403 DP_E_0005_0001_U_N
March 19, 2002 3:07 PM

ZONE	LTR	DESCRIPTION	DATE	APPROVED
	A	SEE ECP NO. 87CE0065	[illegible]	[illegible]
	C	SEE ECP NO. 85CEI297CI	[illegible]	[illegible]
	D	SEE ECP NO. 88CE3507	[illegible]	[illegible]
	E	SEE ECP NO. 56CV0297R2	[illegible]	[illegible]

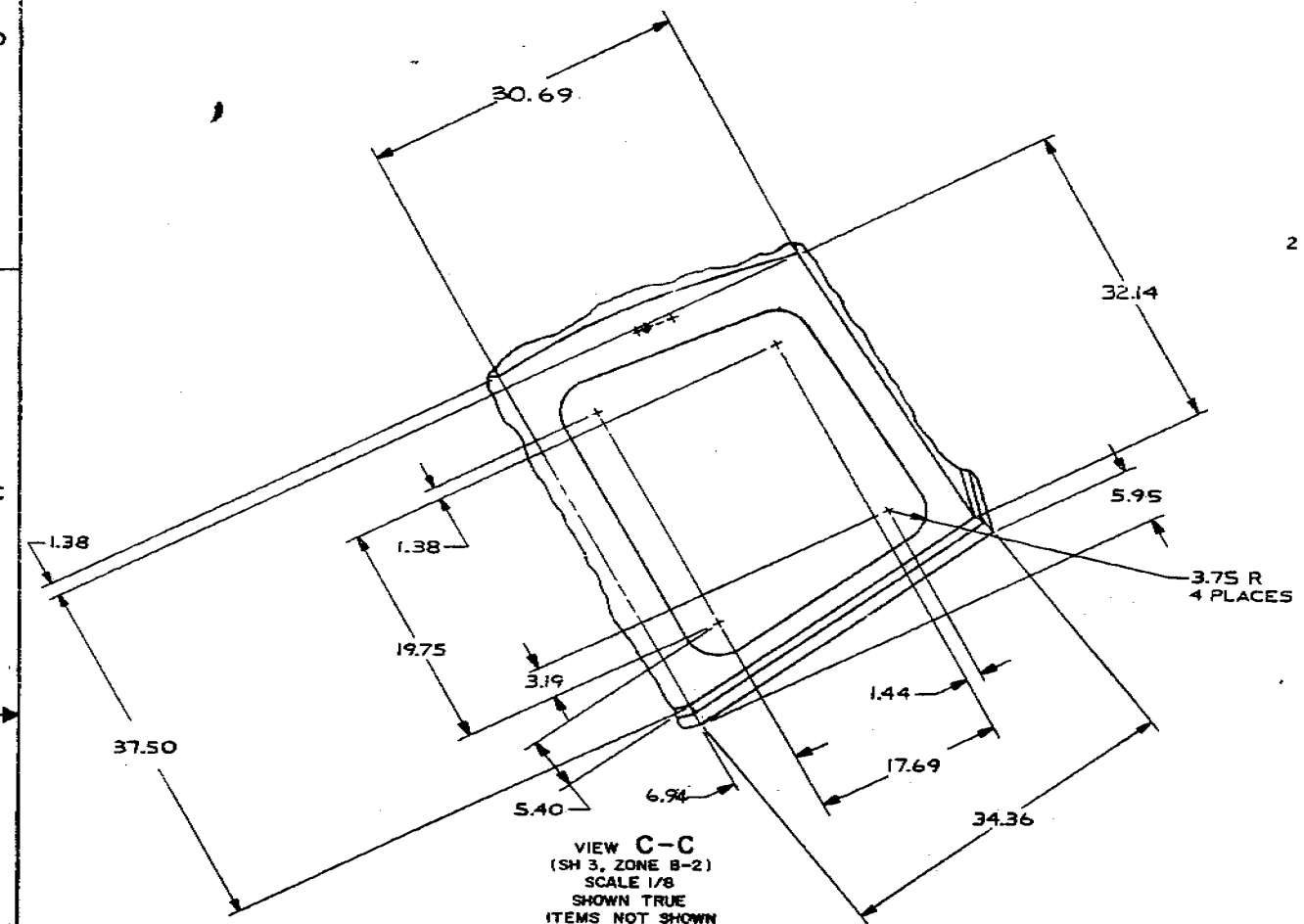

VIEW C-C
(SH 3, ZONE B-2)
SCALE 1/8
SHOWN TRUE
ITEMS NOT SHOWN
OMITTED FOR CLARITY

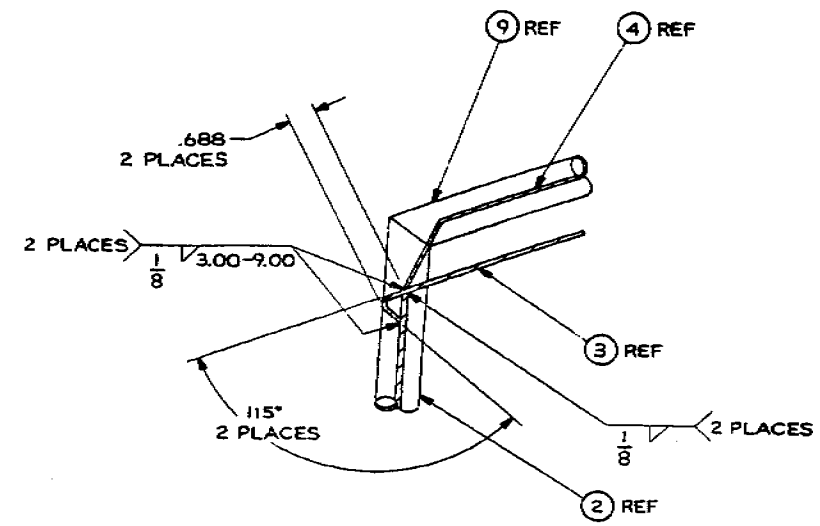

SECTION D-D
(SH 4, ZONE C-6)
SCALE 1/1

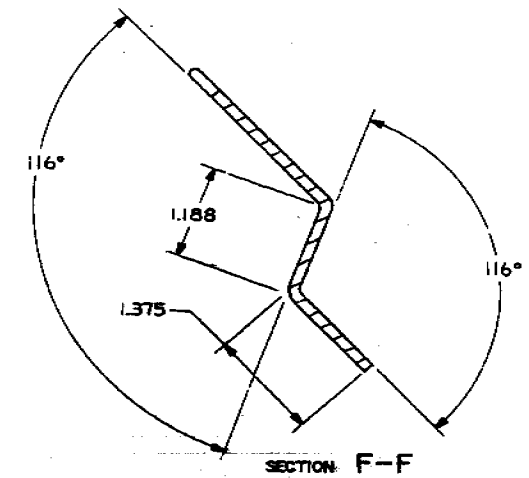

SECTION F-F
(SH 3, ZONE B-6)
SCALE 1/1
2 PLACES
ITEMS NOT SHOWN
OMITTED FOR CLARITY

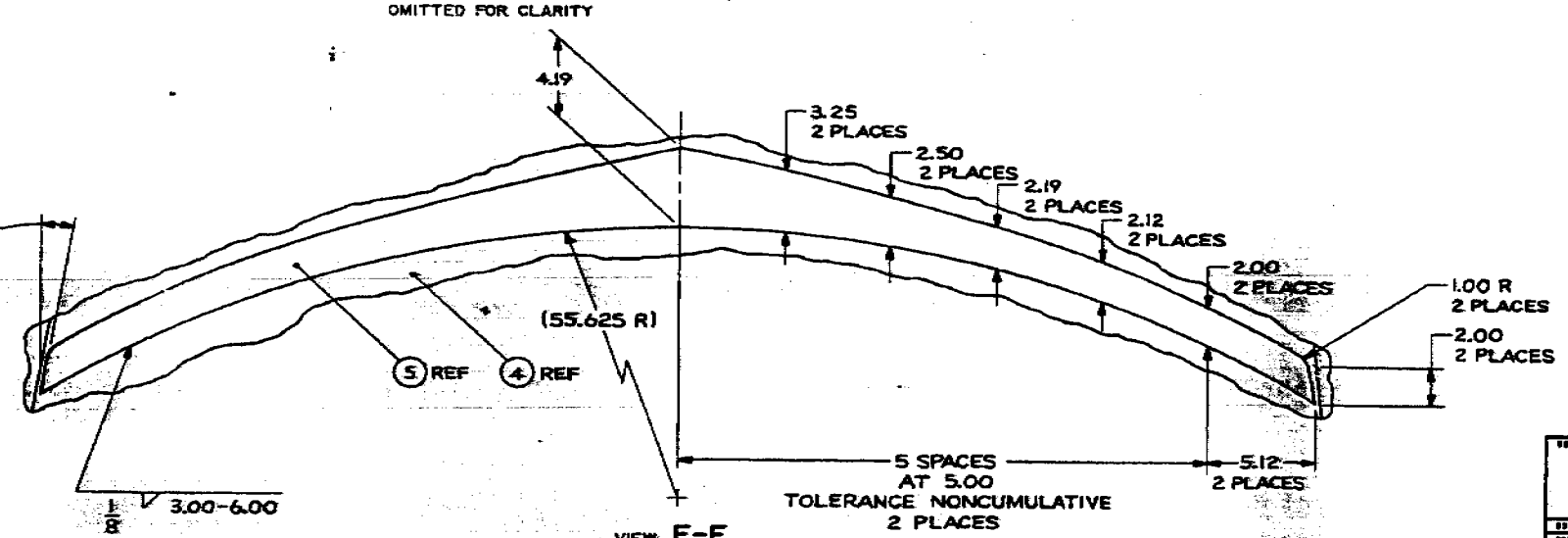

VIEW E-E
(SH 4, ZONE D-6)
ROTATED 54° CCW

UNLESS OTHERWISE SPECIFIED DIM/TOLERANCES ARE: [illegible] INCH
ONE PLACE [illegible] ±
TWO PLACE [illegible] ±
THREE PLACE [illegible] ±
ANGLES ±
THIRD ANGLE PROJECTION
DO NOT SCALE THIS DRAWING
FOR INTERPRETATION OF DRAWING/DOCUMENTS REF. MIL-100 APPLIES
REMOVE BURRS AND BREAK SHARP EDGES
FINISH [illegible]
MATERIAL [illegible]

DRAWN BY MT/F
DATE 23 JUL 86
LAYOUT BY C.T. PROD. [illegible]
CHECKED BY [illegible]
[illegible]
APPROVED FOR PRODUCT. [illegible]
DATE [illegible]

U.S. ARMY MOBILITY EQUIPMENT
RESEARCH AND DEVELOPMENT COMMAND
FORT BELVOIR, VIRGINIA 22060

CAB CONSTRUCTION

SIZE	FSCM	DWG NO.
A1	97403	13226E0581

SCALE | SHEET 5

13226E0581_97403_DP_F_0006_0001_U_N
March 19, 2002 3:06 PM

ZONE	LTR	DESCRIPTION	DATE	APPROVED
	A	SEE ECP NO. 87CE0066, 88CE0066R3, R4 AND R5	[illegible]	[illegible]
	B	SEE ECP NO. 87CE0476	[illegible]	[illegible]
	D	SEE ECP NO. 88CE3507	[illegible]	[illegible]
	F	SEE ECP NO. 93HF3057	[illegible]	[illegible]

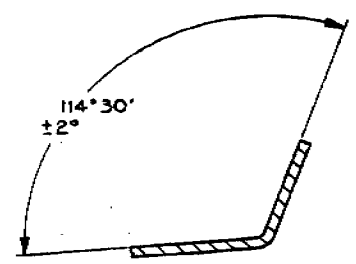

SECTION G-G
(SH 4, ZONE B-4)
SCALE 1/1

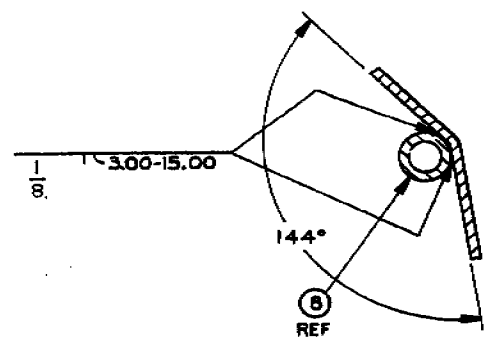

SECTION H-H
(SH 4, ZONE B-4)
SCALE 1/1

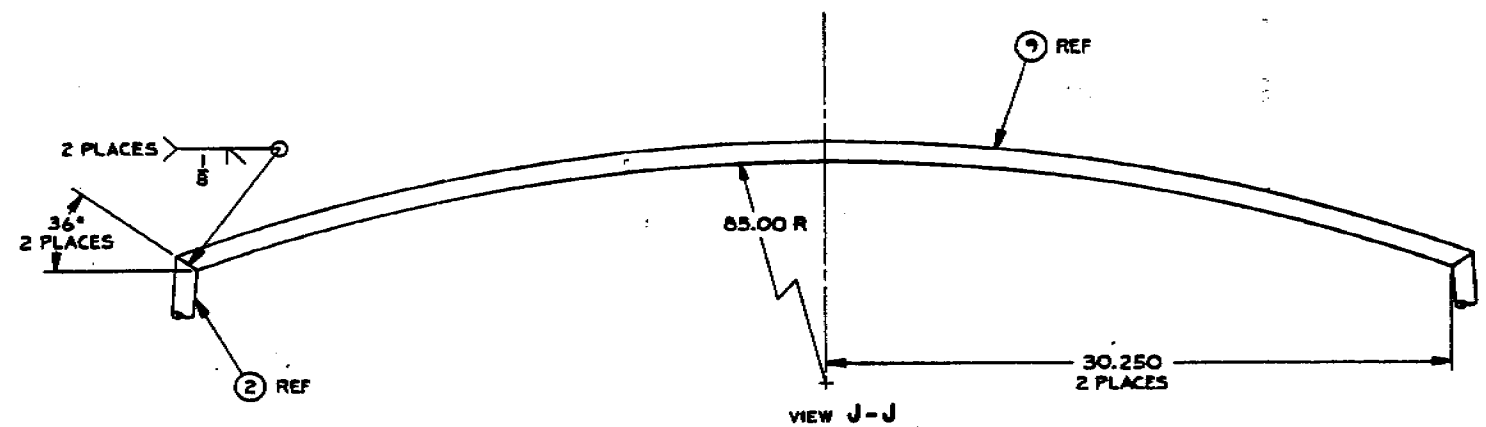

VIEW J-J
(SH 4, ZONE D-7)
SCALE 1/4
ITEMS NOT SHOWN
OMITTED FOR CLARITY

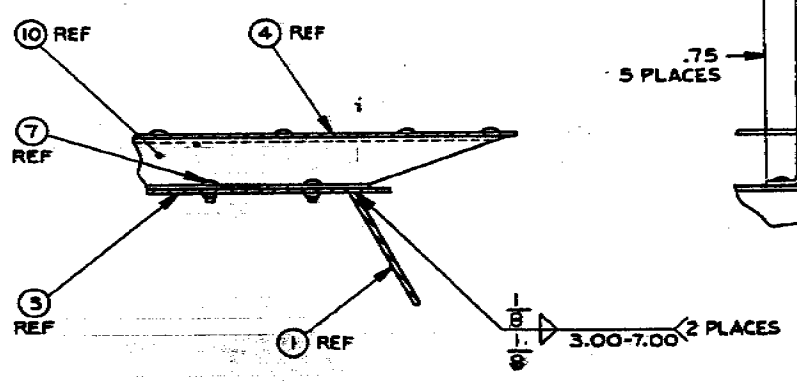

SECTION K-K
(SH 2, ZONE C-6)
SCALE 1/2

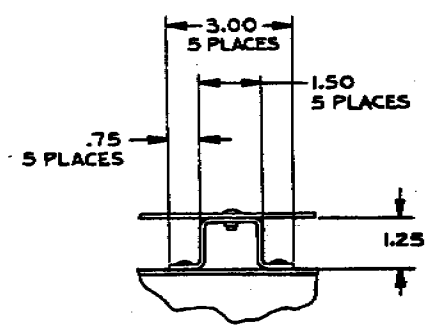

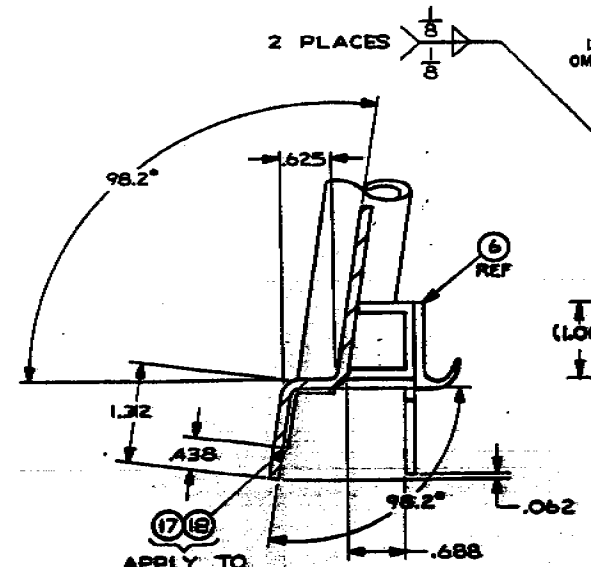

APPLY TO
TOTAL LENGTH
OF CAB

SECTION L-L
(SH 4, ZONE B-6)
SCALE 1/1
2 PLACES
ITEMS NOT SHOWN
OMITTED FOR CLARITY

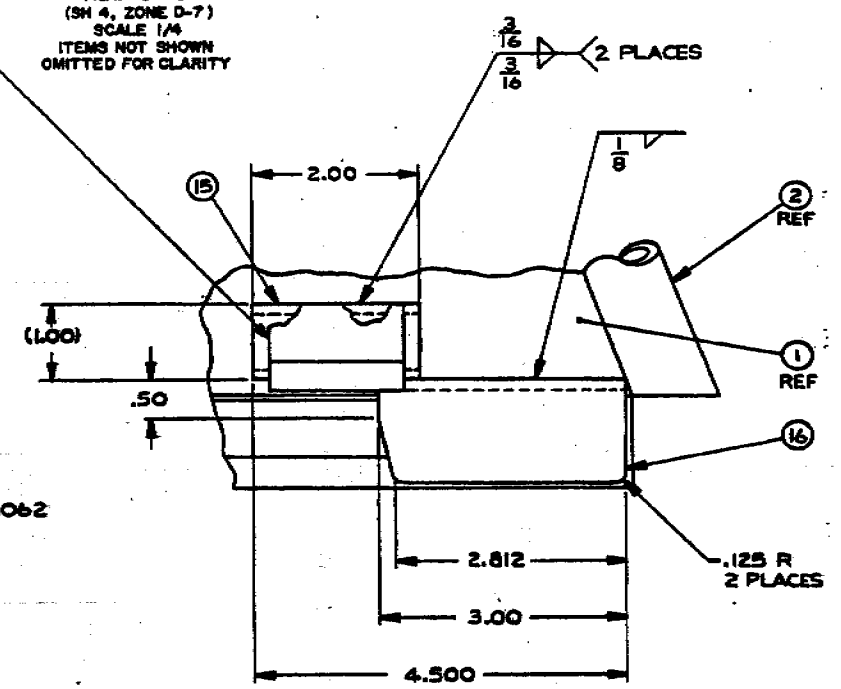

U.S. ARMY MOBILITY EQUIPMENT
RESEARCH AND DEVELOPMENT COMMAND
FORT BELVOIR, VIRGINIA 22060

CAB CONSTRUCTION

SIZE	CODE	DWG NO
A1	97403	13226E0581

SCALE | SHEET

13226E0581_97403_DP_F_0007_0001_U_N
March 19, 2002 3:06 PM

REVISIONS				
ZONE	LTR	DESCRIPTION	DATE	APPROVED
	D	SEE ECP NO. 88CE3507	[illegible]	[illegible]
	F	SEE ECP NO. 93HE3057	[illegible]	[illegible]

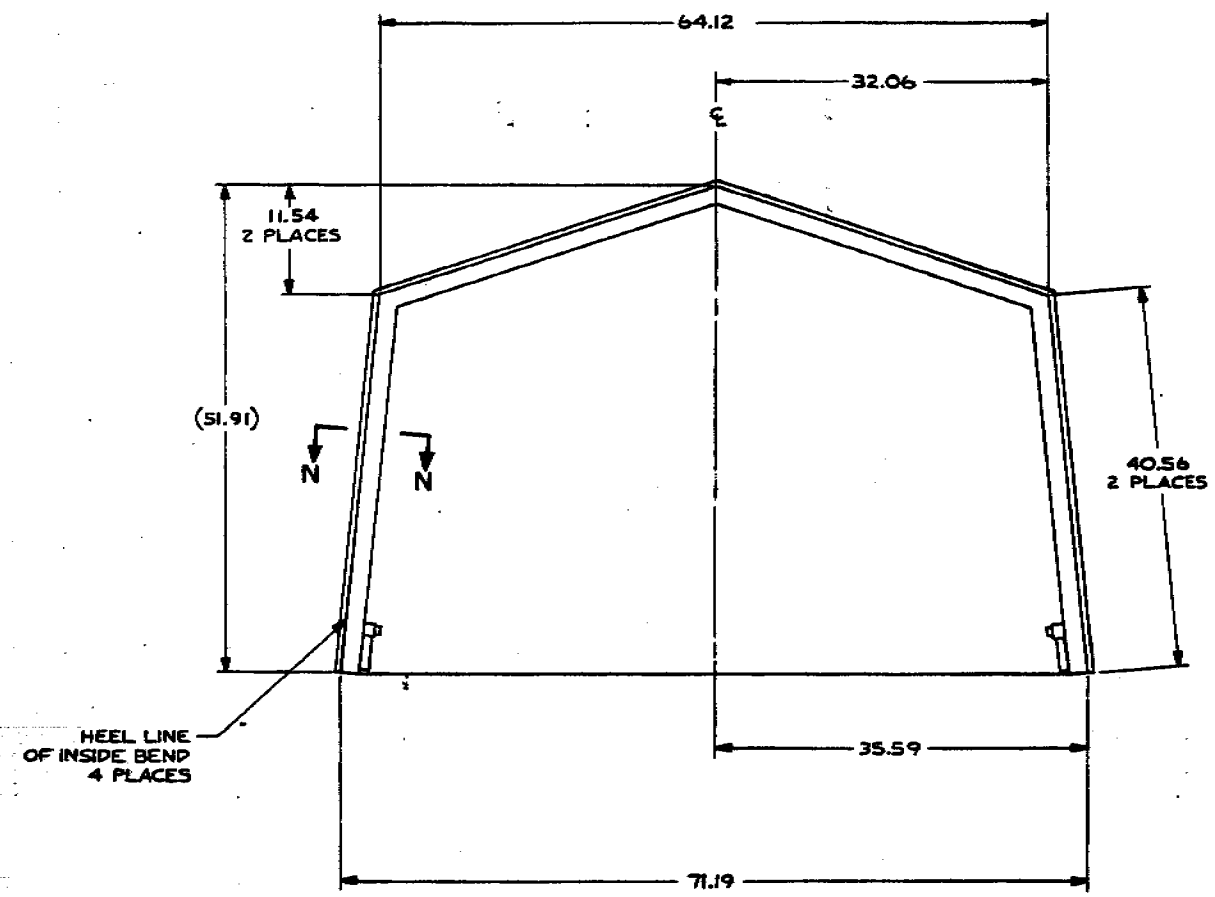

VIEW M-M
(SH 2, ZONE B-3)
SCALE 1/8

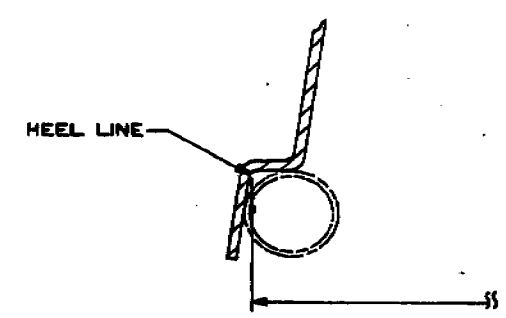

VIEW N-N
SCALE 1/1

UNLESS OTHERWISE SPECIFIED DIM/TOLERANCES ARE: per std.
ONE PLANE ±.25 ±
TWO PLANE ±.125 ±
THREE PLANE ±.125 ±
ANGLES ±1
THIRD ANGLE PROJECTION
DO NOT SCALE THIS DRAWING
FOR INTERPRETATION OF MILITARY DRAWING, MIL-D-70 APPLIES
DRAWN BY MT/F
DATE 23 JUL 86
SHEET 1 OF
CONTRACT NO
DESIGN APPROVAL
DATE 26 Sep 86
APPROVED FOR PROCUREMENT
DATE 26 Sep 86

U.S. ARMY MOBILITY EQUIPMENT
RESEARCH AND DEVELOPMENT COMMAND
FORT BELVOIR, VIRGINIA 22060

CAB CONSTRUCTION

SIZE	CODE	DWG NO.	REV
A1	97403	13226E0581	

SCALE: SHEET 1

13226E0581_97403_DP_F_0004_0001_U_N
March 19, 2002 3:07 PM

ZONE	LTR	DESCRIPTION	DATE	APPROVED
	A	SEE ECP NO. 87CE0065	13 Apr 87	RAC
	D	SEE ECP NO. 88CE3507	14 Jun 88	RAC
	E	SEE ECP NO. 89CV0297R2	[illegible]	[illegible]
	F	SEE ECP NO. 93HE3067	26 Mar 93	[illegible]

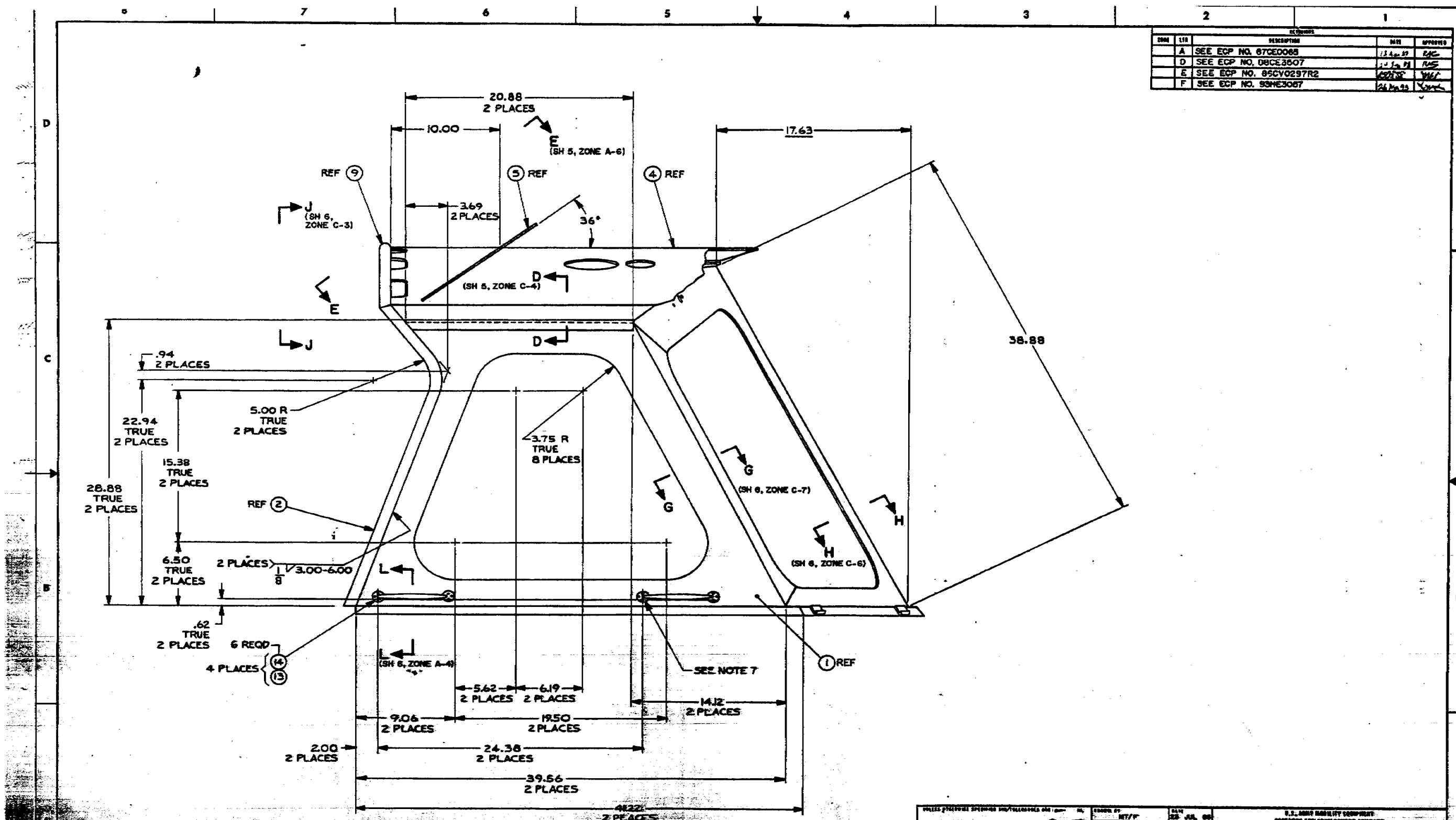

U.S. ARMY MOBILITY EQUIPMENT
RESEARCH AND DEVELOPMENT COMMAND
FORT BELVOIR, VIRGINIA 22060

CAB CONSTRUCTION

SIZE A1 | FSCM 97403 | DWG NO. 13226E0581

SHEETS	46	45	44	43	42	41	40	39	38	37	36	35	34	33	32	31	30	29	28	27	26	25	24	23	22	21	20	19	18	17	16	15	14	13	12	11	10	9	8	7	6	5	4	3	2
REV	F	F	F	F	E	F	F	F	F	F	E	K	G	C	E	G	F	H	G	J	F	F	F	E	F	G	E	E	F	E	J	F	E	F	F	G	F	G	F	F	F	F	F	K	H

STATUS OF REVISIONS

ZONE	LTR	DESCRIPTION	DATE	APPROVED
	L	REPLACED WITH CHANGE, SEE ECP NO. 92HE3436	93-08-05	

NOTES:

1. UNLESS OTHERWISE SPECIFIED CRAFT IS SYMMETRICAL ABOUT CENTER LINE.
2. CONSOLE CUTOUTS ARE NOT SYMMETRICAL ABOUT CENTER LINE.
3. UNLESS OTHERWISE SPECIFIED, ALL TUBE SUPERSTRUCTURE AFT OF TRANSOM SHALL HAVE DIMENSIONAL TOLERANCE OF ± .12".
4. RIVETING SHALL BE IN ACCORDANCE WITH 13217E1061, CLASS 3.
5. PRETREAT AND PAINT IN ACCORDANCE WITH MIL-T-704, TYPE F OR G AS APPLICABLE.
6. INSTALL RIVET FIND NO. 151 IN ACCORDANCE WITH MANUFACTURER'S RECOMMENDED PROCEDURE
7. SHEET, FIND NO. 15, SHALL BE BONDED TO ANGLE, FIND NO. 11, 36 AND FLAT BAR FIND NO. 14, WITH ADHESIVE, FIND NO. 16.
8. PREPARATION OF SURFACE AND BONDING SHALL BE IN ACCORDANCE WITH ADHESIVE MANUFACTURER'S RECOMMENDED PROCEDURES.
9. PROVIDE HOLES IN ANGLE, FIND NO. 225 USING FASTENER, FIND NO. 250 AS TEMPLATE.
10. LOCATE PLATE, FIND NO. 274, 275, APPROXIMATELY AS SHOWN AND MATCH DRILL USING PLATE AS TEMPLATE.
11. THE BUOYANCY MATERIALS GENERAL ARRANGEMENT DRAWING, 13226E0447 MUST BE USED WITH THIS DRAWING TO INSTALL NON-REMOVABLE BUOYANCY MATERIAL.
12. FOR HULL LINES AND OFFSETS SEE DRAWING 13226E0180.
13. WELDING SHALL BE IN ACCORDANCE WITH 13211E8326, CLASS I, TYPE III, EXCEPT WELDS MARKED WITH THE INSPECTION SYMBOL "PT" WHICH SHALL BE IN ACCORDANCE WITH 13211E8326, CLASS I, TYPE II.

(FOR CONTINUATION OF NOTES, SEE SHEET 3)

FIND NO.	FSCM	DWG SIZE	PART OR IDENTIFYING NO.	QTY REQD	NOMENCLATURE OR DESCRIPTION	SPECIFICATION	MATERIAL
97			ALY 6061-T6	2	CHANNEL, 2.00 X 2.00 X .188 STK	ASTM B221	AL ALY
96			ALY 6063-T52	1	CHANNEL, SHARP CORNER, 2.00 X 1.00 X .188 STK, SEE NOTE 15	ASTM B221	AL ALY
95			ALY 5083-0	1	PLATE, .250 STK	ASTM B209	AL ALY
94			ALY 6061-T6	2	ANGLE, .75 X .75 X .125 STK	ASTM B221	AL ALY
93			ALY 6061-T6	4	ANGLE, 2.00 X 1.50 X .188 STK	ASTM B221	AL ALY
92			ALY 6063-T52	1	CHANNEL, SHARP CORNER, 2.00 X 1.00 X .188 STK, SEE NOTE 15	ASTM B221	AL ALY
91			ALY 5083-0	2	SHEET, .125 STK	ASTM B209	AL ALY
90			ALY 6063-T52	2	CHANNEL, SHARP CORNER, 2.00 X 1.00 X .188 STK, SEE NOTE 15	ASTM B221	AL ALY
89			ALY 5083-0	2	PLATE, .250 STK	ASTM B209	AL ALY
88			ALY 5083-0	2	PLATE, .250 STK	ASTM B209	AL ALY
87			ALY 5083-0	2	PLATE, .250 STK	ASTM B209	AL ALY
86			ALY 5083-0	1	PLATE, .250 STK	ASTM B209	AL ALY
85			ALY 5083-0	2	SHEET, .102 STK	ASTM B209	AL ALY
84			ALY 6063-T52	1	CHANNEL, SHARP CORNER, 2.00 X 1.00 X .188 STK, SEE NOTE 15	ASTM B221	AL ALY
83			ALY 6061-T6	2	ANGLE, 4.00 X 3.00 X .250 STK	ASTM B221	AL ALY
82			ALY 6061-T6	2	ANGLE, 3.00 X 2.00 X .250 STK	ASTM B221	AL ALY
81			ALY 6061-T6511	2	TUBE, 1.50 OD X .125 WALL STK SEE NOTE 27	ASTM B221	AL ALY
80			ALY 6061-T6511	1	TUBE, 1.50 OD X .125 WALL STK SEE NOTE 27	ASTM B221	AL ALY
79			ALY 5083-0	1	PLATE, .250 STK	ASTM B209	AL ALY
78			ALY 5083-0	2	PLATE, .250 STK	ASTM B209	AL ALY
77			ALY 6061-T6511	6	TUBE, 1.50 OD X .125 WALL STK SEE NOTE 27	ASTM B221	AL ALY
76			ALY 5083-0	6	PLATE, .250 STK	ASTM B209	AL ALY
75			13226E0187-1	1	EXTRUSION, GUNWALE, MODIFIED		
74			13226E0187-1	1	EXTRUSION, GUNWALE, MODIFIED		
73			ALY 6061-T6511	2	TUBE, 1.50 OD X .125 WALL STK SEE NOTE 27	ASTM B221	AL ALY
72			ALY 6063-T52	4	ANGLE, SHARP CORNER, 1.50 X 1.50 X .125 STK, SEE NOTE 15	ASTM B221	AL ALY
71			ALY 6063-T52	4	ANGLE, SHARP CORNER, 1.50 X 1.50 X .125 STK, SEE NOTE 15	ASTM B221	AL ALY
70			ALY 6061-T4	1	TREAD PLATE, .125 STK (SEE NOTE 25)	ASTM B632	AL ALY
69			ALY 6061-T6511	1	TUBE, 1.500 OD X .125 WALL STK SEE NOTE 27	ASTM B221	AL ALY
68			ALY 6061-T6511	2	TUBE, 1.500 OD X .125 WALL STK SEE NOTE 27	ASTM B221	AL ALY
67			ALY 6061-T6511	2	TUBE, 1.500 OD X .125 WALL STK SEE NOTE 27	ASTM B221	AL ALY
66			ALY 6061-T4	1	TREAD PLATE, .125 STK (SEE NOTE 25)	ASTM B632	AL ALY
65			ALY 6061-T6	1	ANGLE, .750 X .750 X .125 STK	ASTM B221	AL ALY
64			ALY 6061-T6511	2	TUBE, 1.500 OD X .125 WALL STK SEE NOTE 27	ASTM B221	AL ALY
63			ALY 6061-T6511	2	TUBE, 1.500 OD X .125 WALL STK SEE NOTE 27	ASTM B221	AL ALY
62			ALY 6061-T6511	2	TUBE, 1.500 OD X .125 WALL STK SEE NOTE 27	ASTM B221	AL ALY
61			ALY 5083-0	4	PLATE, .250 STK	ASTM B209	AL ALY
60							
59			ALY 6063-T52	1	TUBE, SQUARE, 1.50 X 1.50 X .125 WALL STK, SEE NOTE 15 AND 27	ASTM B221	AL ALY
58			ALY 5083-H116	1	PLATE, .250 STK	ASTM B209	AL ALY
57			ALY 5086-H111	1	FLAT BAR, 2.00 X .250 STK SEE NOTE 15	ASTM B221	AL ALY
56			ALY 5086-H111	1	FLAT BAR, 2.00 X .250 STK SEE NOTE 15	ASTM B221	AL ALY
55			ALY 5086-H111	2	FLAT, BAR, 2.00 X .250 STK SEE NOTE 15	ASTM B221	AL ALY
54			ALY 5083-0	2	PLATE, .375 STK	ASTM B209	AL ALY
53			ALY 5083-0	2	SHEET, .160 STK	ASTM B209	AL ALY
52			ALY 6063-T52	4	FLAT BAR, 2.00 X .250 STK SEE NOTE 15	ASTM B221	AL ALY
51			ALY 6061-T6511	1	TUBE, 2.00 OD X .125 WALL STK	ASTM B221	AL ALY
50			ALY 5083-H112	4	PLATE, .250 STK	ASTM B209	AL ALY
49			ALY 5086-H111	10	FLAT BAR, 2.00 X .250 STK SEE NOTE 15	ASTM B221	AL ALY
48			ALY 5086-H111	1	FLAT BAR, 4.00 X .250 STK SEE NOTE 15	ASTM B221	AL ALY
47			ALY 5086-H111	1	FLAT BAR, 2.00 X .250 STK SEE NOTE 15	ASTM B221	AL ALY
46			ALY 5086-H111	2	FLAT BAR, 2.00 X .250 STK SEE NOTE 15	ASTM B221	AL ALY
45			ALY 5086-H111	2	FLAT BAR, 2.00 X .250 STK SEE NOTE 15	ASTM B221	AL ALY
44			ALY 6061-T6511	1	FLAT BAR, 2.50 X .250 STK	ASTM B221	AL ALY
43			ALY 6061-T6	2	CHANNEL, SHARP CORNER, 2.00 X 1.00 X .188 STK	ASTM B221	AL ALY
42			ALY 6061-T6511	1	FLAT BAR, 2.00 X .250 STK	ASTM B221	AL ALY
41			ALY 5083-0	4	PLATE, .500 STK	ASTM B209	AL ALY
40			ALY 5083-0	1	SHEET, .160 STK	ASTM B209	AL ALY
39			ALY 5083-0	1	SHEET, .125 STK	ASTM B209	AL ALY
38			ALY 6061-T6511	2	FLAT BAR, 2.00 X .250 STK	ASTM B221	AL ALY
37			ALY 5083-0	1	SHEET, .125 STK	ASTM B209	AL ALY
36			ALY 6061-T6	1	ANGLE, 2.00 X 1.00 X .188 STK SEE NOTE 18	ASTM B221	AL ALY
35			ALY 6061-T6	1	ANGLE, 2.00 X 1.00 X .188 STK SEE NOTE 18	ASTM B221	AL ALY
34			ALY 6061-T6	1	ANGLE, 2.00 X 1.00 X .188 STK SEE NOTE 18	ASTM B221	AL ALY
33			ALY 6063-T52	2	CHANNEL, SHARP CORNER, 2.00 X 1.00 X .188 STK, SEE NOTE 15	ASTM B221	AL ALY

PARTS LIST

DISTRIBUTION STATEMENT A.
APPROVED FOR PUBLIC RELEASE; DISTRIBUTION IS UNLIMITED.

FIND NO.	FSCM	DWG SIZE	PART OR IDENTIFYING NO.	QTY REQD	NOMENCLATURE OR DESCRIPTION	SPECIFICATION	MATERIAL
32			ALY 5083-0	1	SHEET, .125 STK	ASTM B209	AL ALY
31			ALY 5086-H111	1	FLAT BAR, 2.00 X .250 STK SEE NOTE 15	ASTM B221	AL ALY
30			ALY 6061-T6	1	ANGLE, 2.00 X 1.00 X .188 STK SEE NOTE 18	ASTM B221	AL ALY
29			ALY 6061-T6	1	ANGLE, 2.00 X 1.00 X .188 STK SEE NOTE 18	ASTM B221	AL ALY
28			ALY 6061-T6	1	ANGLE, 2.00 X 1.00 X .188 STK SEE NOTE 18	ASTM B221	AL ALY
27			ALY 5083-0	1	SHEET, .160 STK	ASTM B209	AL ALY
26			ALY 6061-T6	1	ANGLE, 1.50 X 1.50 X .125 STK	ASTM B221	AL ALY
25			ALY 5083-0	1	SHEET, .160 STK	ASTM B209	AL ALY
24			ALY 5083-0	1	SHEET, .125 STK	ASTM B209	AL ALY
23			ALY 5086-H111	2	FLAT BAR, 1.500 X .250 STK SEE NOTE 15	ASTM B221	AL ALY
22			ALY 6061-T6	1	ANGLE, 2.00 X 1.00 X .188 STK SEE NOTE 18	ASTM B221	AL ALY
21			ALY 6061-T6	1	ANGLE, 2.00 X 1.00 X .188 STK SEE NOTE 18	ASTM B221	AL ALY
20			ALY 6061-T6	1	ANGLE, 2.00 X 1.00 X .188 STK SEE NOTE 18	ASTM B221	AL ALY
19			ALY 6061-T6	1	ANGLE, 2.00 X 1.00 X .188 STK SEE NOTE 18	ASTM B221	AL ALY
18			ALY 5083-0	1	SHEET, .125 STK	ASTM B209	AL ALY
17			ALY 6063-T52	2	CHANNEL, SHARP CORNER, 2.00 X 1.00 X .188 STK, SEE NOTE 15	ASTM B221	AL ALY
16			TYPE II	AR	ADHESIVE, RUBBER BASE, GENERAL PURPOSE	MMM-A-1617	
15			M3BC017A14C12E034	AR	SHEET, .125 STK	ASTM D2000	RUBBER
14			ALY 5086-H111	6	FLAT BAR, 2.00 X .250 STK SEE NOTE 15	ASTM B221	AL ALY
13			ALY 5083-0	1	SHEET, .125 STK	ASTM B209	AL ALY
12			ALY 6061-T6	1	ANGLE, 2.00 X 1.00 X .188 STK SEE NOTE 18	ASTM B221	AL ALY
11			ALY 6061-T6	1	ANGLE, 2.000 X 1.000 X .188 STK SEE NOTE 18	ASTM B221	AL ALY
10			ALY 6063-T52	1	FLAT BAR, 1.500 X .188 STK SEE NOTE 18	ASTM B221	AL ALY
9			ALY 5083-0	1	SHEET, .160 STK	ASTM B209	AL ALY
8			ALY 5083-0	12	SHEET, .160 STK	ASTM B209	AL ALY
7			ALY 5083-0	1	PLATE, .250 STK	ASTM B209	AL ALY
6			ALY 5083-0	1	PLATE, .625 STK OR EXTRUDED	ASTM B209 OR B221	AL ALY
5			13226E0187-3	AR	EXTRUSION, CHINE		
4			13226E0187-2	AR	EXTRUSION, CORNER		
3			ALY 5083-0	AR	SHEET, .160 STK	ASTM B209	AL ALY
2			ALY 5083-0	AR	SHEET, .080 STK	ASTM B209	AL ALY
1			13226E0187-1	AR	EXTRUSION, GUNWALE		

PARTS LIST

UNLESS OTHERWISE SPECIFIED DIMENSIONS/TOLERANCES ARE IN INCHES
ONE PLACE ± —
TWO PLACE ± .06
THREE PLACE ± .030
ANGLES ± 2°
THIRD ANGLE PROJECTION

DRAWN BY: HA — DATE: 3 DEC 85
CHECKED BY: ETB Q.C.

U.S. ARMY MOBILITY EQUIPMENT RESEARCH AND DEVELOPMENT COMMAND FORT BELVOIR, VIRGINIA 22060

HULL STRUCTURE, USCSB MK 2

SIZE	FSCM	DWG NO
A1	97403	13226E0449

SCALE 1/2 — SHEET 1 OF 46

REVISIONS

ZONE	LTR	DESCRIPTION	DATE	APPROVED
	A	SEE ECP NO. 84HE0841	18 JUL 85	R.A.L.
	B	SEE ECP NO. 84CE1204R1 AND 85CE0454	10 OCT 85	R.A.L.
	C	SEE ECP NO. 85CE1382	11 Apr 86	[illegible]
	D	SEE ECP NO. 86CE0114R1 AND 86CE0106R1	26 Sep 86	RAE
	E	SEE ECP NO. 86CE3466	29 Apr 87	[illegible]
	F	SEE ECP NO. 87CE0591	30 Nov 87	RAE
	H	SEE ECP NO. 88CE0382	26 Sep 88	RAE

PARTS LIST

FIND NO.	FSCM	DWG SIZE	PART OR IDENTIFYING NO.	QTY REQD	NOMENCLATURE OR DESCRIPTION	SPECIFICATION	MATERIAL
227							
226			ALY 6061-T6511	2	TUBE,1.25 OD X .125 WALL STK SEE NOTE 27	ASTM B221	AL ALY
225			ALY 6061-T6	2	FLAT BAR,1.00 X .190 STK	ASTM B221	AL ALY
224			ALY 6061-T6511	2	TUBE,1.25 OD X .125 WALL STK SEE NOTE 27	ASTM B221	AL ALY
223			ALY 5083-0	1	SHEET,.125 STK	ASTM B209	AL ALY
222			ALY 5083-0	1	PLATE,.250 STK	ASTM B209	AL ALY
221			ALY 6061-T6511	1	TUBE,1.500 OD X .125 WALL STK SEE NOTE 27	ASTM B221	AL ALY
220				8	BOLT,FL HD-METRIC,M8 X 1.0 COARSE SERIES,30MM L	COML	CRES
219			ALY 6061-T6	4	SHEET,.160 STK	ASTM B209	AL ALY
218			ALY 6061-T6	4	SHEET,.160 STK	ASTM B209	AL ALY
217			ALY 5083-0	2	SHEET,.188 STK	ASTM B209	AL ALY
216			ALY 6061-T6	2	ANGLE,2.500 X 1.500 X .188 STK	ASTM B221	AL ALY
215			ALY 5083-0	2	SHEET,.188 STK	ASTM B209	AL ALY
214			ALY 6061-T6	2	ANGLE,2.500 X 1.500 X .188 STK	ASTM B221	AL ALY
213			ALY 6061-T6	2	CHANNEL,3.000 X 2.000 X .188 STK	ASTM B221	AL ALY
212			ALY 5083-0	2	PLATE,.375 STK	ASTM B209	AL ALY
211			13226E0362	1	PLATE,STAPLE,FIXED LOOP		STEEL
210			ALY 5083-0	1	SHEET,.125 STK	ASTM B209	AL ALY
209							
208					--		
207							
206							
205							
204							
203							
202			ALY 6061-T6511	1	TUBE,.750 OD X .125 WALL STK SEE NOTE 27	ASTM B221	AL ALY
201			ALY 5083-0	1	SHEET,.160 STK	ASTM B209	AL ALY
200			ALY 6061-T6	8	ANGLE,1.500 X 1.500 X .125 STK	ASTM B221	AL ALY
199			ALY 6061-T6	4	ANGLE,1.500 X 1.500 X .125 STK	ASTM B221	AL ALY
198			ALY 5083-0	1	SHEET,.125 STK	ASTM B209	AL ALY
197			ALY 5083-0	2	SHEET,.125 STK	ASTM B209	AL ALY
196			ALY 5083-0	1	SHEET,.160 STK	ASTM B209	AL ALY
195			ALY 6061-T6	1	ANGLE,1.000 X 1.000 X .125 STK	ASTM B221	AL ALY
194			ALY 5083-0	1	PLATE,.625 STK OR EXTRUDED	ASTM B209 OR B221	AL ALY
193			ALY 6061-T6511	2	TUBE,1.500 OD X .125 WALL STK SEE NOTE 27	ASTM B221	AL ALY
192			ALY 5083-0	2	SHEET,.188 STK	ASTM B209	AL ALY
191			ALY 6061-T6	2	CHANNEL,3.00 X 2.00 X .188 STK	ASTM B221	AL ALY
190			ALY 5083-0	2	PLATE,.375 STK	ASTM B209	AL ALY
189			ALY 6061-T651	2	PLATE,.250 STK	ASTM B209	AL ALY
188			ALY 6061-T651	2	PLATE,.250 STK	ASTM B209	AL ALY
187			ALY 6061-T651	2	PLATE,.250 STK	ASTM B209	AL ALY
186			ALY 6061-T651	2	PLATE,.250 STK	ASTM B209	AL ALY
185			ALY 6061-T651	4	PLATE,.250 STK	ASTM B209	AL ALY
184			ALY 6061-T651	2	PLATE,.625 STK	ASTM B209	AL ALY
183							
182							
181			ALY 5083-0	2	PLATE,.250 STK	ASTM B209	AL ALY
180							
179			ALY 5083-0	1	PLATE,.500 STK	ASTM B209	AL ALY
178			ALY 6061-T4	1	TREAD PLATE,.125 STK (SEE NOTE 25)	ASTM B632	AL ALY
177			TYPE XIII,CL1 OR CL2	22	WEBBING TEXTILE,WOVEN NYLON,COLOR BLACK,AR L	MIL-W-4088	
176			MS20600B6W4	84	RIVET,BLIND,3/16 DIA,.188-.250 GRIP RANGE		
175			13226E0311-3	22	BUCKLE,FRICTION,TIEDOWN STRAP		
174			ALY 5083-0	2	PLATE,.250 STK	ASTM B209	AL ALY
173			ALY 5083-0	2	PLATE,.250 STK	ASTM B209	AL ALY
172			ALY 5083-0	2	PLATE,.250 STK	ASTM B209	AL ALY
171			ALY 5083-0	2	PLATE,.250 STK	ASTM B209	AL ALY
170			ALY 5083-0	1	PLATE,.250 STK	ASTM B209	AL ALY
169			ALY 5083-0	1	PLATE,.250 STK	ASTM B209	AL ALY
168			ALY 5083-0	4	PLATE,.250 STK	ASTM B209	AL ALY
166			ALY 6061-T6511	2	TUBE,3.00 OD X .250 WALL STK SEE NOTE 27	ASTM B221	AL ALY
165			ALY 5083-0	2	PLATE,.250 STK	ASTM B209	AL ALY
164			ALY 6061-T651	1	BAR,4.00 DIA STK	ASTM B221	AL ALY
163			ALY 5083-0	2	PLATE,.250 STK	ASTM B209	AL ALY
162			ALY 6061-T6511	2	TUBE,3.50 OD X .188 WALL STK SEE NOTE 27	ASTM B221	AL ALY
161			ALY 5083-0	2	PLATE,.250 STK	ASTM B209	AL ALY
160			ALY 5083-0	4	PLATE,.250 STK	ASTM B209	AL ALY
159			ALY 5083-0	2	PLATE,.250 STK	ASTM B209	AL ALY
158			ALY 5083-0	2	PLATE,.250 STK SEE NOTE 17	ASTM B209	AL ALY
157			ALY 5083-0	2	PLATE,.250 STK	ASTM B209	AL ALY
156			ALY 5083-0	1	PLATE,.250 STK	ASTM B209	AL ALY
155							
154							
153			ALY 5083-0	2	PLATE,.250 STK	ASTM B209	AL ALY
152							
151			13226E0301-2	364	RIVET,BLIND,SELF PLUGGING,PROTRUDING HEAD		
150			ALY 5083-0	1	PLATE,.250 STK	ASTM B209	AL ALY
149			ALY 6061-T6	2	ANGLE,2.00 X 1.00 X .188 STK SEE NOTE 18	ASTM B221	AL ALY
148			ALY 6063-T52	1	CHANNEL,SHARP CORNER,2.00 X 1.00 X .188 STK,SEE NOTE 15	ASTM B221	AL ALY
147			ALY 5083-0	1	SHEET,.125 STK	ASTM B209	AL ALY
146			ALY 5083-0	2	SHEET,.125 STK	ASTM B209	AL ALY
145			MS20600B6W5	22	RIVET,BLIND,STRUCTURAL PULL STEM,.188 DIA X .465 L		
144			ALY 5083-0	2	SHEET,.125 STK	ASTM B209	AL ALY
143			ALY 5086-H111	2	FLAT BAR,1.50 X .125 STK SEE NOTE 15	ASTM B221	AL ALY
142			ALY 6063-T52	1	CHANNEL,SHARP CORNER,2.00 X 1.00 X .188 STK,SEE NOTE 15	ASTM B221	AL ALY
141			ALY 6063-T52	3	CHANNEL,SHARP CORNER,2.00 X 1.00 X .188 STK,SEE NOTE 15	ASTM B221	AL ALY
140			ALY 5083-0	1	PLATE,.250 STK	ASTM B209	AL ALY
139			ALY 6061-T6	3	ANGLE,2.00 X 1.00 X .188 STK SEE NOTE 18	ASTM B221	AL ALY
138			ALY 5083-0	1	SHEET,.125 STK	ASTM B209	AL ALY
137			ALY 6063-T52	2	CHANNEL,SHARP CORNER,2.00 X 1.00 X .188 STK,SEE NOTE 15	ASTM B221	AL ALY
136			ALY 5083-0	2	SHEET,.125 STK	ASTM B209	AL ALY
135			ALY 6061-T6511	2	FLAT BAR,1.50 X .188 STK	ASTM B221	AL ALY
134			ALY 6061-T6511	2	FLAT BAR,1.50 X .188 STK	ASTM B221	AL ALY
133			ALY 6061-T4	1	TREAD PLATE,.125 STK (SEE NOTE 25)	ASTM B632	AL ALY
132			ALY 6061-T4	1	TREAD PLATE,.125 STK (SEE NOTE 25)	ASTM B632	AL ALY
131			ALY 6061-T6511	2	FLAT BAR,1.50 X .188 STK	ASTM B221	AL ALY
130			ALY 6061-T4	1	TREAD PLATE,.125 STK (SEE NOTE 25)	ASTM B632	AL ALY
129			ALY 6061-T6511	2	FLAT BAR,1.50 X .188 STK	ASTM B221	AL ALY
128			ALY 5083-0	1	SHEET,.125 STK	ASTM B209	AL ALY
127			ALY 5083-0	1	SHEET,.160 STK	ASTM B209	AL ALY
126			ALY 5083-0	1	SHEET,.160 STK	ASTM B209	AL ALY
125			ALY 6061-T6	2	SHEET,.188 STK	ASTM B209	AL ALY
124			ALY 6061-T6511	1	TUBE,2.50 OD X .125 WALL STK SEE NOTE 27	ASTM B221	AL ALY
123							
122			ALY 5083-0	1	SHEET,.125 STK	ASTM B209	AL ALY
121			ALY 5083-0	1	SHEET,.125 STK	ASTM B209	AL ALY
120			ALY 5083-0	2	ANGLE,6.00 X 2.50 X .125 STK	ASTM B221	AL ALY
119			ALY 6061-T6	1	SHEET,.188 STK	ASTM B209	AL ALY
118			ALY 5083-0	1	SHEET,.125 STK	ASTM B209	AL ALY
117			ALY 5086-H111	2	FLAT BAR,2.00 X .25 STK SEE NOTE 15	ASTM B221	AL ALY
116			ALY 5083-0	1	PLATE,.250 STK	ASTM B209	AL ALY
115			ALY 5083-0	1	SHEET,.125 STK	ASTM B209	AL ALY
114			ALY 6061-T6	2	ANGLE,4.75 X 2.00 X .250 STK	ASTM B221	AL ALY
113			ALY 6061-T6	1	SHEET,.188 STK	ASTM B209	AL ALY
112			ALY 5083-0	1	PLATE,.250 STK	ASTM B209	AL ALY
111			ALY 5083-0	1	PLATE,.250 STK	ASTM B209	AL ALY
110			ALY 5083-0	2	SHEET,.102 STK	ASTM B209	AL ALY
109			ALY 5086-H111	2	FLAT BAR,1.00 X .250 STK SEE NOTE 15	ASTM B221	AL ALY
108			ALY 5086-H111	1	FLAT BAR,1.00 X .250 STK SEE NOTE 15	ASTM B221	AL ALY
107			ALY 5083-0	2	SHEET,.160 STK	ASTM B209	AL ALY
106			ALY 5083-0	1	PLATE,.250 STK	ASTM B209	AL ALY
105			ALY 6061-T4	1	TREAD PLATE,.125 STK (SEE NOTE 25)	ASTM B632	AL ALY
104			ALY 5083-0	2	PLATE,.250 STK	ASTM B209	AL ALY
103			ALY 5083-0	1	SHEET,.188 STK	ASTM B209	AL ALY
102			ALY 5083-0	1	PLATE,.250 STK	ASTM B209	AL ALY
101			ALY 5083-0	2	PLATE,.250 STK	ASTM B209	AL ALY
100			ALY 5083-0	1	SHEET,.125 STK	ASTM B209	AL ALY
99			ALY 5083-0	1	PLATE,.500 STK	ASTM B209	AL ALY
98			ALY 6061-T6	2	CHANNEL,2.00 X 2.00 X .188 STK	ASTM B221	AL ALY

UNLESS OTHERWISE SPECIFIED DIM/TOLERANCES ARE: [illegible]
ONE PLACE [.X] ±
TWO PLACE [.XX] ±
THREE PLACE [.XXX] ±
ANGLES ±

THIRD ANGLE PROJECTION

DO NOT SCALE THIS DRAWING

FOR INTERPRETATION OF DRAWING DOD-STD-100 APPLIES

REMOVE BURRS AND BREAK SHARP EDGES

MATERIAL

DRAWN BY: HA — DATE: 3 DEC 83

CHECKED BY: E.F.B. Q.C.

CONTRACT NO.

APPROVED: John M. Shot — DATE: 4 Jan 84

APPROVED FOR PROCUREMENT: R. E. Hill

U.S. ARMY MOBILITY EQUIPMENT RESEARCH AND DEVELOPMENT COMMAND
FORT BELVOIR, VIRGINIA 22060

HULL STRUCTURE, USCSB MK 2

SIZE	FSCM	DWG NO.
A1	97403	13226E0449

SCALE — SHEET 2

NOTES: (CONTD FROM SHEET 1)

14. QUALITY ASSURANCE PROVISIONS:

A. ALL HULL EXTERIOR WELDS UP TO THE GUNWALE OR WELDS WITH THE INSPECTION SYMBOL "PT" SHALL BE DYE PENETRANT INSPECTED 100%

B. CLASSIFICATION OF CHARACTERISTICS:
CRITICAL - NONE
MAJOR - AQL 2.5% (M101-M108)

C. SAMPLING INSPECTION SHALL BE IN ACCORDANCE WITH MIL-STD-105.

15. ALY 5083-O MAY BE USED AS AN OPTIONAL MATERIAL FOR THE FOLLOWING FIND NUMBERS: 10,16,17,23,31,33,45 THRU 49,52,55,56,57,59,71,72, 84,90,92,96,108,109,117,137,141,142,143,148,249,251,302 AND 303.

16.

17. OPTIONAL MATERIAL FOR FIND NO. 158:
ALY 5083-H112,TUBE,4.00 OD X .25 WALL,ASTM B241
2ND OPTION,ALY 6061-T6 TUBE

18. ALLOY 6063-T52 MAY BE USED AS AN OPTIONAL MATERIAL FOR THE FOLLOWING FIND NUMBERS:
11, 12, 19, 20, 21, 22, 28, 29, 30, 34, 35, 36, 139 AND 189.

19. INDICATED SURFACE OF KEEL COOLER TUNNEL,FIND NO. 280,2 PLACES, IS TO BE IN THE SAME PLANE ALONG IT'S ENTIRE LENGTH. (NO TWIST)

20. TOOLING HOLES AND WELDED TOOLING BRACKETS ARE PERMISSIBLE AS MANUFACTURING AIDS,PROVIDED THEY DO NOT ADVERSELY AFFECT THE BOAT'S STRUCTURAL INTEGRITY. TOOLING BRACKETS AND HOLES WHICH WOULD ADVERSELY AFFECT THE INTEGRITY OR WATERTIGHTNESS OF THE HULL WILL BE REPAIRED IN ACCORDANCE WITH THE APPLICABLE REPAIR PROCEDURE.

21. TYPICAL WELDING OF BOAT FRAMES TO SKIN SHALL BE AS FOLLOWS:

A. WELDED JOINT LENGTHS FROM 0-6 INCHES.

3/16 ▷ 3.00
3/16 ▽ 3.00

B. WELDED JOINT LENGTHS FROM 6 INCHES UP.

3/16 ▷ 3.00-9.00
3/16 ▽ 3.00-9.00

22. LOCAL DISTORTIONS (PLATE BUCKLES) IN THE HULL SKIN,HATCHES OR BULK HEADS SHALL NOT EXCEED A TOTAL DEPARTURE OF .31 INCH.

23. DIMENSIONS ARE FOR DEVELOPMENT OF DETAILS AND FOR LOCATION OF THESE DETAILS. THE TITLE BLOCK TOLERANCE IS FOR INSPECTION OF THESE DETAILS PRIOR TO ASSEMBLY AND FOR LOCATION OF THE DETAILS PRIOR TO WELDMENT. VARIATIONS MAY OCCUR AFTER WELDMENT PROVIDED THEY DO NOT EXCEED ±.250.
THE FOLLOWING DIMENSIONS MUST MEET TITLE BLOCK TOLERANCE AFTER WELDING: *

24. PERMANENT STEEL STAMP THE SERIAL NUMBER OF THE BOAT ON THE OUTBOARD STARBOARD ENGINE FOUNDATION SUPPORT,CLOSE TO STATION NUMBER 5.

25. OPTIONAL MATERIAL: PLATE, TREAD, FIVE-BAR PATTERN, IN ACCORDANCE WITH 13226E0548-1.

26. LOCATE BRACKET,FIND NO. 282, AND HOOK,FIND NO. 283,APPROXIMATELY AS SHOWN,AND PROVIDE HOLES FOR RIVETS,FIND NO. 176,USING BRACKET AND HOOK AS A TEMPLATE.

27. ALUM ALY 6061-T6,ASTM B210,MAY BE USED AS AN OPTIONAL MATERIAL FOR FIND NO. 59,62,63,64,67,68,69,73,77,80,81,124,162,166,193,202, 221,224,226,232,233,234,248,281,291 AND 292.

28. OPTIONAL CONSTRUCTION: FOREDECK TREADPLATE, FIND NO. 178, MAY BE MADE IN THREE PIECES WITH THE JOINTS AT FRAME 9 AND JOINED WITH A SQUARE GROOVE WELD, 2 PLACES.

FIND NO.	FSCM	DWG SIZE	PART OR IDENTIFYING NO.	QTY REQD	NOMENCLATURE OR DESCRIPTION	SPECIFICATION	MATERIAL
305			ALY 5086-H32	1	TREAD PLATE,.125 STK (SEE NOTE 25)	ASTM B632	AL ALY
304			ALY 6061-T651	2	PLATE,.250 STK	ASTM B209	AL ALY
303			ALY 6061-T6	1	SHEET,.160 STK SEE NOTE 15	ASTM B209	AL ALY
302			ALY 6061-T6	3	SHEET,.160 STK SEE NOTE 15	ASTM B209	AL ALY
299			13226E0598	1	PIPE,EXHAUST	ASTM B221	AL ALY
298			13226E0575-1	1	PIPE,EXHAUST	ASTM B221	AL ALY
297			MS20600B6W10	24	RIVET,BLIND,STR,3/16 DIA X .563-.625 GRIP RANGE		
296							
295			ALY 6061-T6	1	SHEET,.190 STK	ASTM B209	AL ALY
294			MS20600B6W6	128	RIVET,BLIND,3/16 DIA,.313-.375 GRIP RANGE		
293			ALY 6061-T6	4	PLATE,.250 STK	ASTM B209	AL ALY
292			ALY 6061-T6	1	TUBE,1.50 OD X .125 WALL STK SEE NOTE 27	ASTM B221	AL ALY
291			ALY 6061-T6	1	TUBE,1.50 OD X .125 WALL STK SEE NOTE 27	ASTM B221	AL ALY
290			ALY 6061-T6	1	CHANNEL,SHARP CORNER,2.38 X 2.38 X .188 STK	ASTM B221	AL ALY
289			ALY 5083-O	1	PLATE,.250 STK	ASTM B209	AL ALY
288			ALY 5083-O	1	SHEET,.125 STK	ASTM B209	AL ALY
287			ALY 6061-T6511	1	BAR,1.000 X .250 STK	ASTM B221	AL ALY
286			ALY 6061-T6511	1	BAR,1.000 X .250 STK	ASTM B221	AL ALY
285			ALY 6061-T6511	1	BAR,1.000 X .250 STK	ASTM B221	AL ALY
284			13226E0187 W	AR	EXTRUSION,TRANSOM		
283	39428		13226E0579 2	1	HANDLE,HOOK		COML STL
282	39428		13226E0579-1	1	BRACKET,HATCHET		COML STL

PARTS LIST

ZONE	LTR	REVISIONS DESCRIPTION	DATE	APPROVED
	A	SEE ECP NO. 84HE0841	[illegible]	[illegible]
	B	SEE ECP NO. 85CE0733 AND 85CE0454	[illegible]	[illegible]
	C	SEE ECP NO. 85CE1382	[illegible]	[illegible]
	D	SEE ECP NO. 86CE0114R1, AND 86CE0106R1, 85CE0732R2, 85CE1027R2		
	E	SEE ECP NO. 86CE3466	[illegible]	[illegible]
	F	SEE ECP NO. 87CE0591	[illegible]	[illegible]
	H	SEE ECP NO. 88CE0382	[illegible]	[illegible]
	J	SEE ECP NO. 88CE3736	[illegible]	[illegible]
	K	SEE ECP NO. 89CE0045	[illegible]	[illegible]

FIND NO.	FSCM	DWG SIZE	PART OR IDENTIFYING NO.	QTY REQD	NOMENCLATURE OR DESCRIPTION	SPECIFICATION	MATERIAL
281			ALY 6061-T6511	2	TUBE,1.50 OD X .125 WALL STK SEE NOTE 27	ASTM B221	AL ALY
280			ALY 5083-O	2	PLATE,.250 STK	ASTM B209	AL ALY
279							
278			ALY 6061-T6	1	ANGLE,1.250 X 1.250 X .250 STK	ASTM B221	AL ALY
277							
276							
275			13226E0481-1	1	PLATE,INFORMATION		AL ALY
274			13226E0481-2	1	PLATE,INFORMATION		AL ALY
273			ALY 5083-O	4	SHEET,.125 STK	ASTM B209	AL ALY
272			ALY 5083-O	4	PLATE,.250 STK	ASTM B209	AL ALY
271			ALY 5083-O	2	PLATE,.250 STK	ASTM B209	AL ALY
270			ALY 6061-T651	4	BAR,1.00 DIA STK	ASTM B221	AL ALY
269			ALY 5083-O	2	SHEET,.125 STK	ASTM B209	AL ALY
268			ALY 5083-O	4	SHEET,.125 STK	ASTM B209	AL ALY
267							
266			ALY 5083-O	2	PLATE,.250 STK	ASTM B209	AL ALY
265			ALY 5083-O	2	SHEET,.125 STK	ASTM B209	AL ALY
264			ALY 5083-O	4	SHEET,.125 STK	ASTM B209	AL ALY
263			ALY 5083-O	2	PLATE,.250 STK	ASTM B209	AL ALY
262			ALY 5083-O	4	PLATE,.250 STK	ASTM B209	AL ALY
261			13226E0312	20	PLATE,TRAPPING,WEBBING		
260			ALY 6061-T6	2	ANGLE,2.000 X 1.000 X .125 STK	ASTM B221	AL ALY
259							
258			ALY 5083-O	10	SHEET,.102 STK	ASTM B209	AL ALY
257			ALY 5083-O	10	SHEET,.102 STK	ASTM B209	AL ALY
256							
255			ALY 6061-T6	AR	ANGLE,2.50 X 2.50 X .250 STK	ASTM B221	AL ALY
254							
253			ALY 5083-O	1	SHEET,.125 STK	ASTM B209	AL ALY
252			ALY 5083-O	1	SHEET,.125 STK	ASTM B209	AL ALY
251			ALY 6063-T52	2	CHANNEL,SHARP CORNER,2.00 X 1.00 X .188 STK,SEE NOTE 15	ASTM B221	AL ALY
250			13226E0580	6	FASTENER,TOGGLE		
249			ALY 5086-H111	1	FLAT BAR,1.500 X .250 STK SEE NOTE 15	ASTM B221	AL ALY
248			ALY 6061-T6511	2	TUBE,3.00 OD X .250 WALL STK SEE NOTE 27	ASTM B221	AL ALY
247			ALY 6061-T6	6	FLAT BAR,2.00 X .250 STK	ASTM B221	AL ALY
246			ALY 5083-O	2	SHEET,.125 STK	ASTM B209	AL ALY
245			ALY 5083-O	8	PLATE,.375 STK	ASTM B209	AL ALY
244			ALY 5083-O	4	PLATE,.375 STK	ASTM B209	AL ALY
243			ALY 5083-O	8	PLATE,.250 STK	ASTM B209	AL ALY
242							
241							
240							
239			ALY 5083-O	1	SHEET,.125 STK	ASTM B209	AL ALY
238			ALY 5083-O	1	SHEET,.125 STK	ASTM B209	AL ALY
237			ALY 6061-T4	1	TREAD PLATE,.125 STK (SEE NOTE 25)	ASTM B632	AL ALY
236			ALY 5083-O	1	SHEET,.125 STK	ASTM B209	AL ALY
235			ALY 6061-T4	1	TREAD PLATE,.125 STK (SEE NOTE 25)	ASTM B632	AL ALY
234			ALY 6061-T6511	1	TUBE,1.25 OD X .125 WALL STK SEE NOTE 27	ASTM B221	AL ALY
233			ALY 6061-T6511	2	TUBE,1.25 OD X .125 WALL STK SEE NOTE 27	ASTM B221	AL ALY
232			ALY 6061-T6511	1	TUBE,1.25 OD X .125 WALL STK SEE NOTE 27	ASTM B221	AL ALY
231			ALY 5083-O	1	SHEET,.125 STK	ASTM B209	AL ALY
230			ALY 5083-O	1	SHEET,.125 STK	ASTM B209	AL ALY
229							
228			ALY 5083-O	1	SHEET,.125 STK	ASTM B209	AL ALY

PARTS LIST

UNLESS OTHERWISE SPECIFIED DIM/TOLERANCES ARE: INCH
ONE PLACE (.X) ±
TWO PLACE (.XX) ±
THREE PLACE (.XXX) ±
ANGLES ±
THIRD ANGLE PROJECTION
DO NOT SCALE THIS DRAWING
THE INTERPRETATION OF DRAWING DOD-STD-100 APPLIES
REMOVE BURRS AND BREAK SHARP EDGES
SHARP EDGES TO
FILLET RADII TO
MATERIAL

DRAWN BY TAS DATE 5 DEC 83
CHECKED BY [illegible] DATE [illegible]
CONTRACT NO
DESIGN APPROVAL [illegible]
DATE [illegible]
APPROVED FOR PROCUREMENT R. E. [illegible]
DATE [illegible]

U.S. ARMY MOBILITY EQUIPMENT RESEARCH AND DEVELOPMENT COMMAND
FORT BELVOIR, VIRGINIA 22060

HULL STRUCTURE, USCSB MK 2

SIZE A1 | FSCM 97403 | DWG NO 13226E0449
SCALE | SHEET 3

REVISIONS				
ZONE	LTR	DESCRIPTION	DATE	APPROVED
	B	SEE ECP NO. 84CE1204R1	10 OCT 85	RJN
	C	SEE ECP NO. 85CE1382	11 Apr 86	RMF
	F	SEE ECP NO. 87CE0591	3 Nov 87	RMF

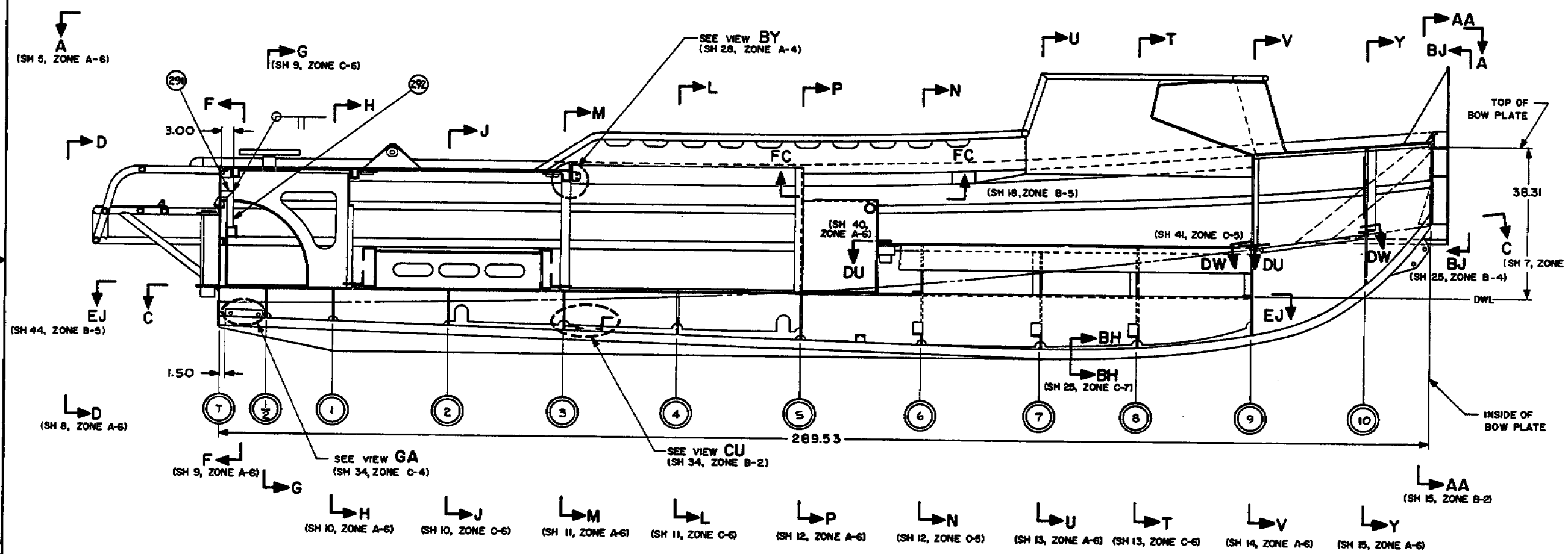

INBOARD PROFILE
SCALE 1" = 1'-0"

UNLESS OTHERWISE SPECIFIED DIM/TOLERANCES ARE per MIL
ONE PLACE (.X) ±
TWO PLACE (.XX) ±
THREE PLACE (.XXX) ±
ANGLES ±
THIRD ANGLE PROJECTION
DO NOT SCALE THIS DRAWING
FOR INTERPRETATION OF DRAWING DOD-STD-100 APPLIES
REMOVE BURRS AND BREAK SHARP EDGES
SHARP EDGES TO
FREEST ROOM TO
MATERIAL

DRAWN BY LAL
DATE 3 DEC 83
CHECKED BY VJE Pond 3 DEC 83
CONTRACT NO
DESIGN APPROVAL John A. Hirt
DATE 4 Jan 84
APPROVED FOR PROCUREMENT R. C. Hill
DATE 5 JAN 1984

U.S. ARMY MOBILITY EQUIPMENT
RESEARCH AND DEVELOPMENT COMMAND
FORT BELVOIR, VIRGINIA 22060

HULL STRUCTURE, USCSB MK 2

SIZE	FSCM	DWG NO
A1	97403	13226E0449

SCALE
SHEET 4

ZONE	LTR	DESCRIPTION	DATE	APPROVED
	A	SEE ECP NO. 84HE0841	12 JUL 85	RMT
	B	SEE ECP NO. 84CE1204R1	10 OCT 85	RMT
	C	SEE ECP NO. 85CE1382	11 Apr 86	DMT
	E	SEE ECP NO. 86CE3466	29 Apr 87	RMT

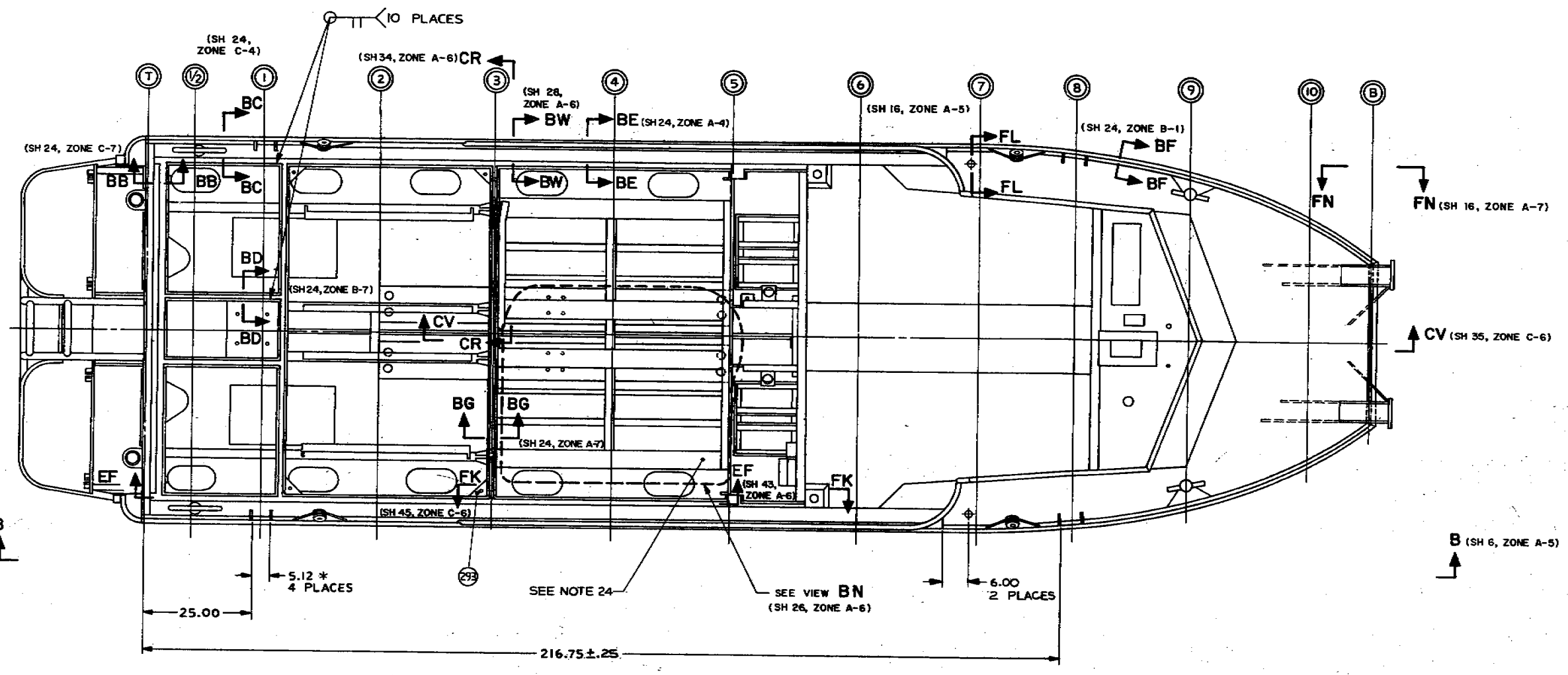

VIEW A-A
(SH 4, ZONE C-8)
SCALE 1" = 1'-0"

UNLESS OTHERWISE SPECIFIED DIM/TOLERANCES ARE: SEE BL
.XXX PLACE (.X) ±
.XX PLACE (.XX) ±
.XXX PLACE (.XXX) ±
ANGLES ±
THIRD ANGLE PROJECTION
DO NOT SCALE THIS DRAWING
FOR INTERPRETATION OF DRAWING DOD-STD-100 APPLIES
DEBURR EDGES AND BREAK SHARP EDGES
SHARP EDGES TO
FILLET RADII TO
MATERIAL

DRAWN BY YHC
DATE 6 DEC 83
CHECKED BY
CONTRACT NO.
DESIGN APPROVAL
DATE 4 Jan 84
APPROVED FOR DEVELOPMENT
DATE 4 Jan 84

U.S. ARMY MOBILITY EQUIPMENT
RESEARCH AND DEVELOPMENT LABORATORY
FORT BELVOIR, VIRGINIA 22060

HULL STRUCTURE, USCSB MK 2

SIZE	FSCM	DWG NO.
A1	97403	13226E0449

SCALE
SHEET 5

REVISIONS				
ZONE	LTR	DESCRIPTION	DATE	APPROVED
	A	SEE ECP NO. 84HE0841	12 JUL 85	
	B	SEE ECP NO. 84CE1204R1.	10 OCT 85	
	C	SEE ECP NO. 85CE1382		
	E	SEE ECP NO. 86CE3466	27 Apr 87	
	F	SEE ECP NO. 87CE0591	30 Nov 87	

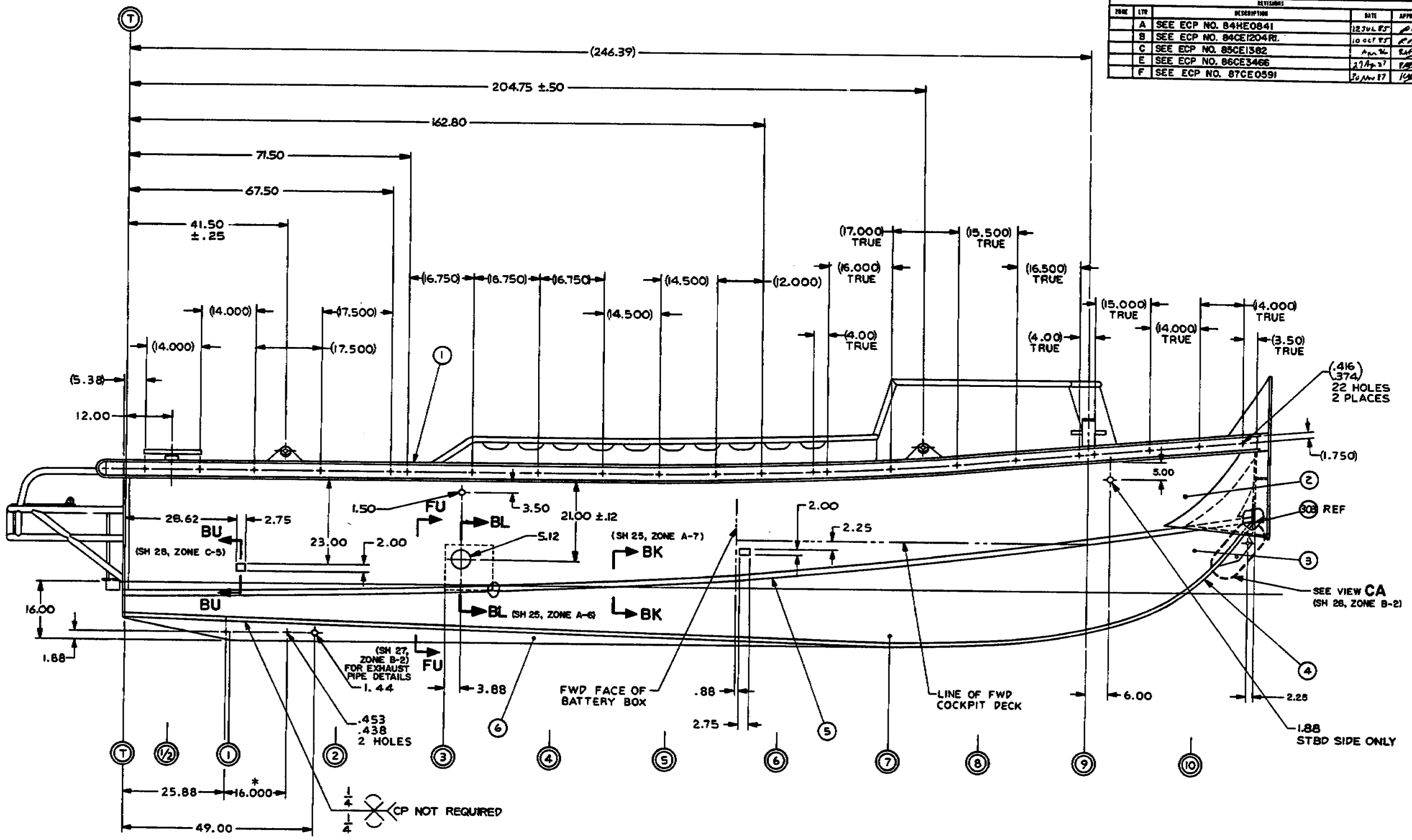

VIEW B-B
(SH 5, ZONE B-1)
SCALE 1"=1'-0"

UNLESS OTHERWISE SPECIFIED DIM/TOLERANCES ARE: SEE DR.
ONE PLACE (.X) ±
TWO PLACE (.XX) ±
THREE PLACE (.XXX) ±
ANGLES ±
THIRD ANGLE PROJECTION

DO NOT SCALE THIS DRAWING
FOR INTERPRETATION OF DRAWING DOD-STD-100 APPLIES
REMOVE BURRS AND BREAK SHARP EDGES
SHARP EDGES TO
FILLET RADII TO
MATERIAL

DRAWN BY YMC
DATE 6 DEC 83
CHECKED BY ETG R.C.
CONTRACT NO.
DESIGN APPROVAL
DATE 4 Jan 84
APPROVED FOR PROCUREMENT
DATE

U.S. ARMY MOBILITY EQUIPMENT RESEARCH AND DEVELOPMENT COMMAND
FORT BELVOIR, VIRGINIA 22060

HULL STRUCTURE, USCSB MK 2

SIZE	FSCM	DWG NO.
A1	97403	13226E0449

SCALE
SHEET 6

REVISIONS				
ZONE	LTR	DESCRIPTION	DATE	APPROVED
	C	SEE ECP NO. 85CE1382	[illegible]	RAE
	D	SEE ECP NO. 85CE1025	23 Sep 86	RAE
	E	SEE ECP NO. 86CE3466	20 Aug 87	RAE

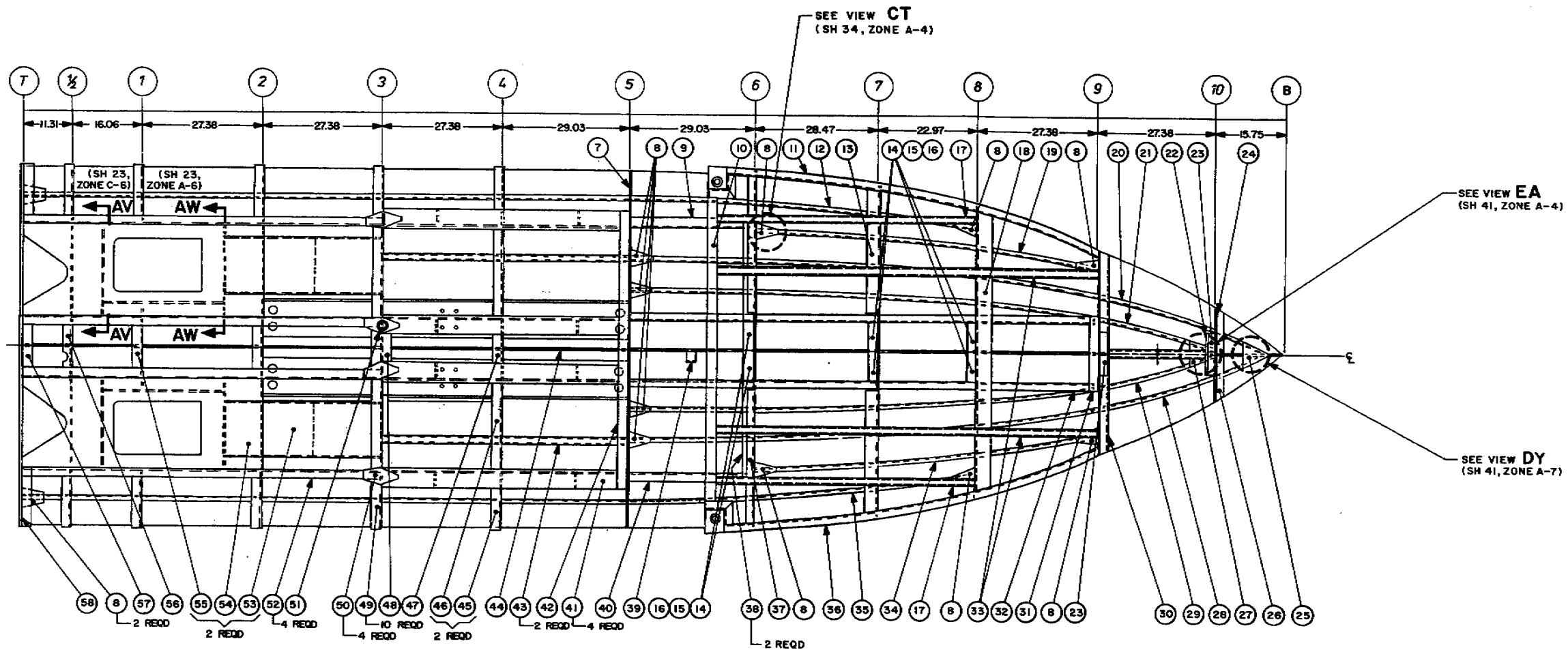

SECTION C-C
(SH 4, ZONE C-1)
SCALE 1"=1'-0"

UNLESS OTHERWISE SPECIFIED DIM/TOLERANCES ARE IN INCHES
ONE PLACE (.X) ±
TWO PLACE (.XX) ±
THREE PLACE (.XXX) ±
ANGLES ±
THIRD ANGLE PROJECTION
DO NOT SCALE THIS DRAWING
FOR INTERPRETATION OF DRAWING DOD-STD-100 APPLIES
REMOVE BURRS AND BREAK SHARP EDGES
SHARP EDGES FO
FILLET RADII FO
MATERIAL

DRAWN BY JLB
DATE 6 DEC 63
CHECKED BY [illegible]
CONTRACT NO.
DESIGN APPROVAL [illegible]
DATE 4 Jan 84
APPROVED FOR PROCUREMENT R. E. [illegible]
DATE 10 JAN 84

U.S. ARMY MOBILITY EQUIPMENT
RESEARCH AND DEVELOPMENT COMMAND
FORT BELVOIR, VIRGINIA 22060

HULL STRUCTURE, USCSB MK 2

SIZE	FSCM	DWG NO.
A1	97403	13226E0449

SCALE
SHEET 7

REVISIONS				
ZONE	LTR	DESCRIPTION	DATE	APPROVED
	A	SEE ECP NO. 84HE0841	18 Jul 85	[illegible]
	C	SEE ECP NO. 85CE1382	11 Apr 86	[illegible]
	E	SEE ECP NO. 86CE3466	29 Apr 87	[illegible]
	F	SEE ECP NO. 87CE0591	30 Nov 87	[illegible]

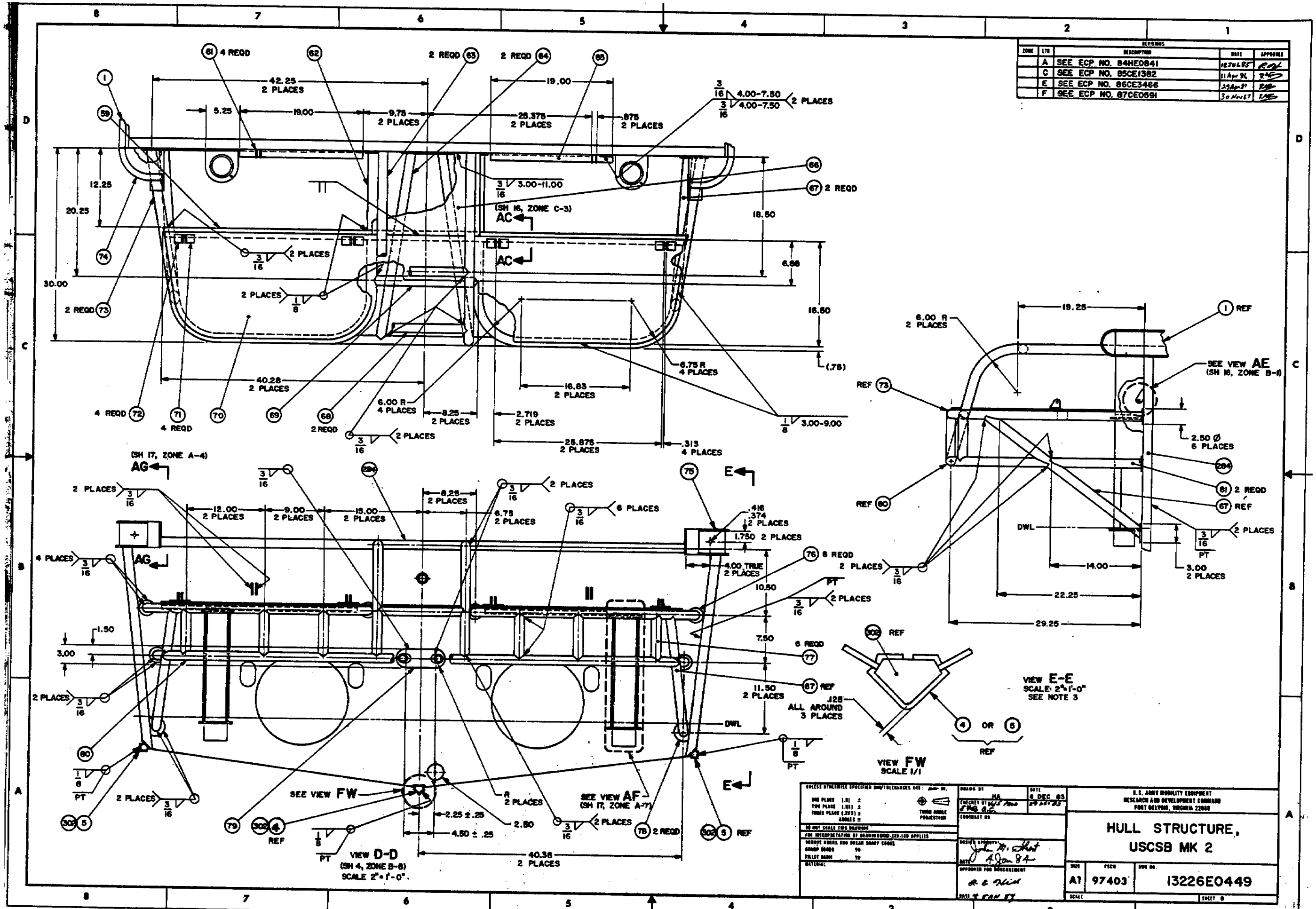

UNLESS OTHERWISE SPECIFIED DIM/TOLERANCES ARE: SEE DR.	DRAWN BY HA	DATE 6 DEC 83	U.S. ARMY MOBILITY EQUIPMENT RESEARCH AND DEVELOPMENT COMMAND FORT BELVOIR, VIRGINIA 22060
ONE PLACE (.X) ± / TWO PLACE (.XX) ± / THREE PLACE (.XXX) ± / ANGLES ±	CHECKED BY [illegible]		HULL STRUCTURE, USCSB MK 2
THIRD ANGLE PROJECTION	CONTRACT NO.		
DO NOT SCALE THIS DRAWING	DESIGN APPROVAL [illegible]		
FOR INTERPRETATION OF DRAWING REQ. STD. 100 APPLIES	APPROVED FOR MANUFACTURE [illegible]		
DEBURR EDGES AND BREAK SHARP EDGES			
GROUND EDGES TO			
FILLET RADII TO			
MATERIAL			

SIZE	FSCM	DWG NO.
A1	97403	13226E0449
SCALE		SHEET 8

ZONE	LTR	DESCRIPTION	DATE	APPROVED
	A	SEE ECP NO. 84HE0841	12 Feb 85	RDK
	C	SEE ECP NO. 85CE1382	11 Apr 86	[illegible]
	D	SEE ECP NO. 86CE0557	26 Sep 86	[illegible]
	E	SEE ECP NO. 86CE3466	26 Sep 87	[illegible]
	F	SEE ECP NO. 87CE0591	30 Nov 87	[illegible]
	G	SEE ECP NO. 85CV1502R5	01 Jan 88	[illegible]

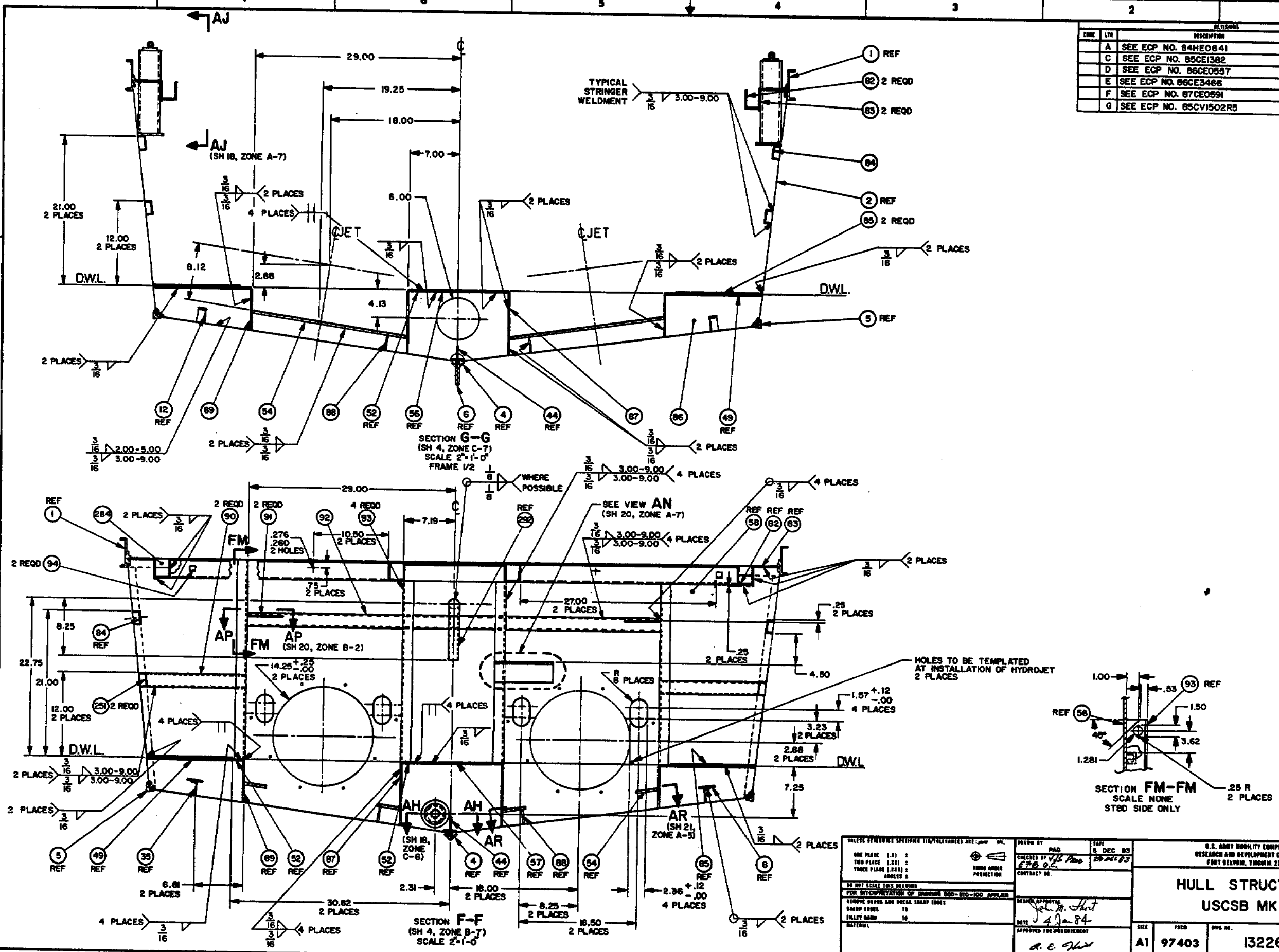

UNLESS OTHERWISE SPECIFIED DIM/TOLERANCES ARE: SEE DWG.
ONE PLACE [.X] ±
TWO PLACE [.XX] ±
THREE PLACE [.XXX] ±
ANGLES ±
THIRD ANGLE PROJECTION
DO NOT SCALE THIS DRAWING
FOR INTERPRETATION OF DRAWING DOD-STD-100 APPLIES
REMOVE BURRS AND BREAK SHARP EDGES
SHARP EDGES 70
FILLET RADIUS 10
MATERIAL

DRAWN BY PAG
DATE 6 DEC 83
CHECKED BY EPB
CONTRACT NO.
DESIGN APPROVAL John M. Short
DATE 4 Jan 84
APPROVED FOR PRODUCTION R. E. Short
DATE 4 JAN 84

U.S. ARMY MOBILITY EQUIPMENT RESEARCH AND DEVELOPMENT COMMAND
FORT BELVOIR, VIRGINIA 22060

HULL STRUCTURE, USCSB MK 2

SIZE	FSCM	DWG NO.
A1	97403	13226E0449

SCALE | SHEET 9

ZONE	LTR	DESCRIPTION	DATE	APPROVED
	A	SEE ECP NO. 84HE0841	18 JUL 85	RAP
	B	SEE ECP NO. 84CE1204R1	10 OCT 85	RAP
	C	SEE ECP NO. 85CE1382	11 APR 86	RAP
	E	SEE ECP NO. 86CE3466	21 APR 87	RAP
	F	SEE ECP NO. 87CE0591	30 JUN 87	RAP

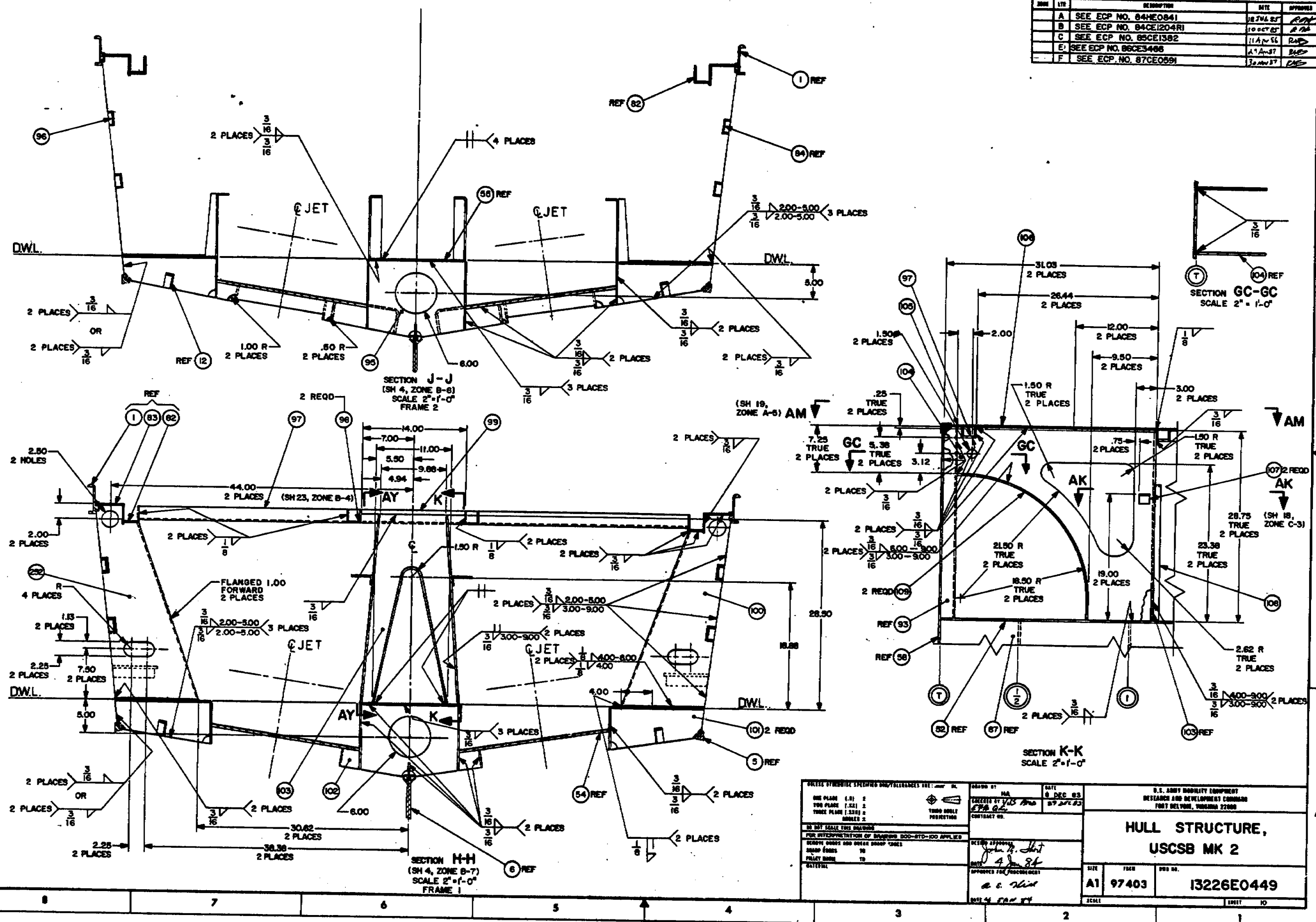

ZONE	LTR	REVISIONS DESCRIPTION	DATE	APPROVED
	A	SEE ECP NO. 84HE0841	12 JUL 85	[illegible]
	C	SEE ECP NO. 85CE1382	[illegible]	[illegible]
	E	SEE ECP NO. 86CE3466	2 [illegible]	[illegible]
	F	SEE ECP NO. 87CE0591	26 NOV 87	[illegible]
	G	SEE ECP NO. 85CE1436R4	01 Jun 88	[illegible]

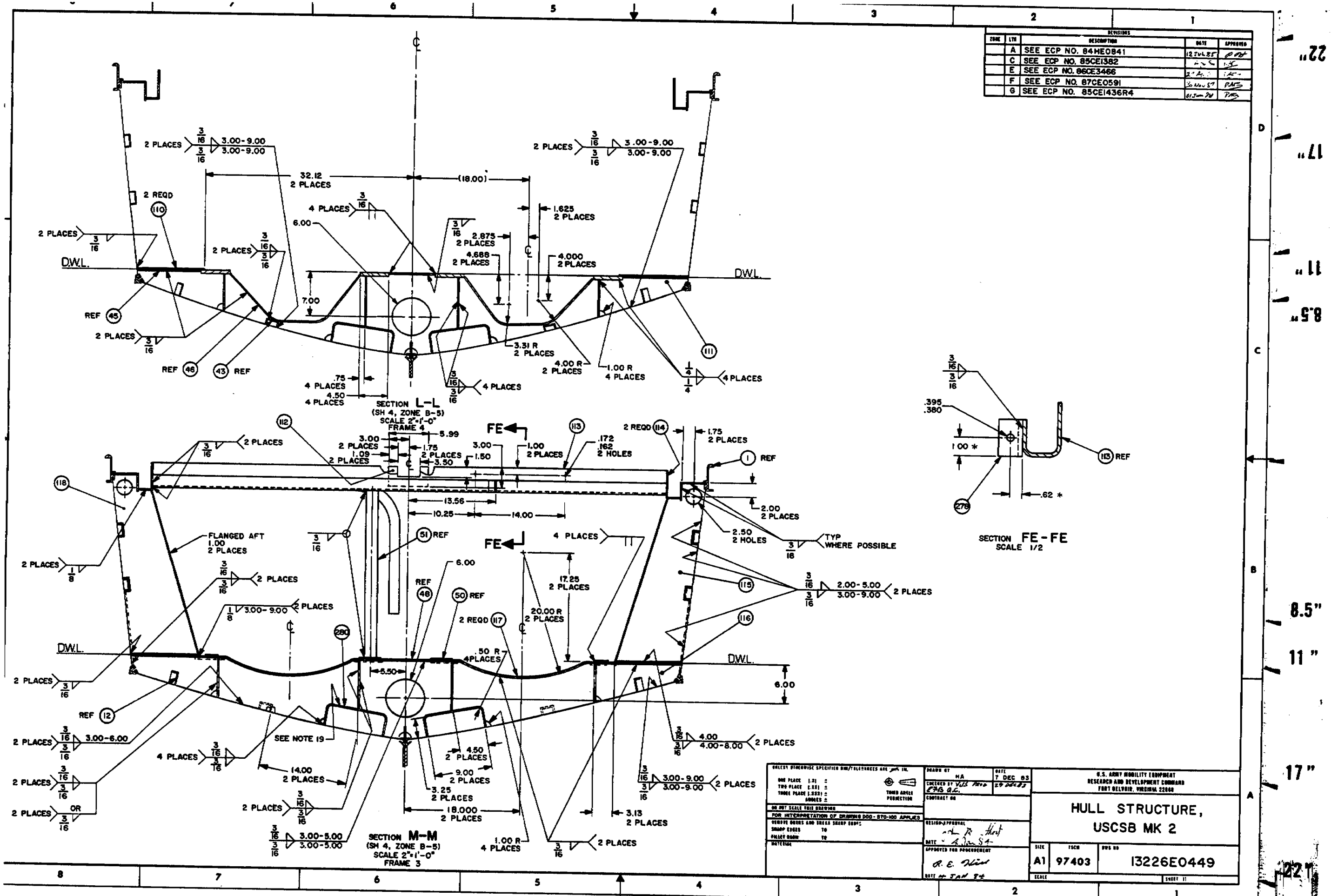

ZONE	LTR	DESCRIPTION	DATE	APPROVED
	C	SEE ECP NO. 85CE1382	11 Apr 86	RAF
	D	SEE ECP NO. 86CE3108	26 Sep 86	RAF
	E	SEE ECP NO. 86CE3466	29 Apr 87	RAF
	F	SEE ECP NO. 87CE0591	30 Nov 87	RAF

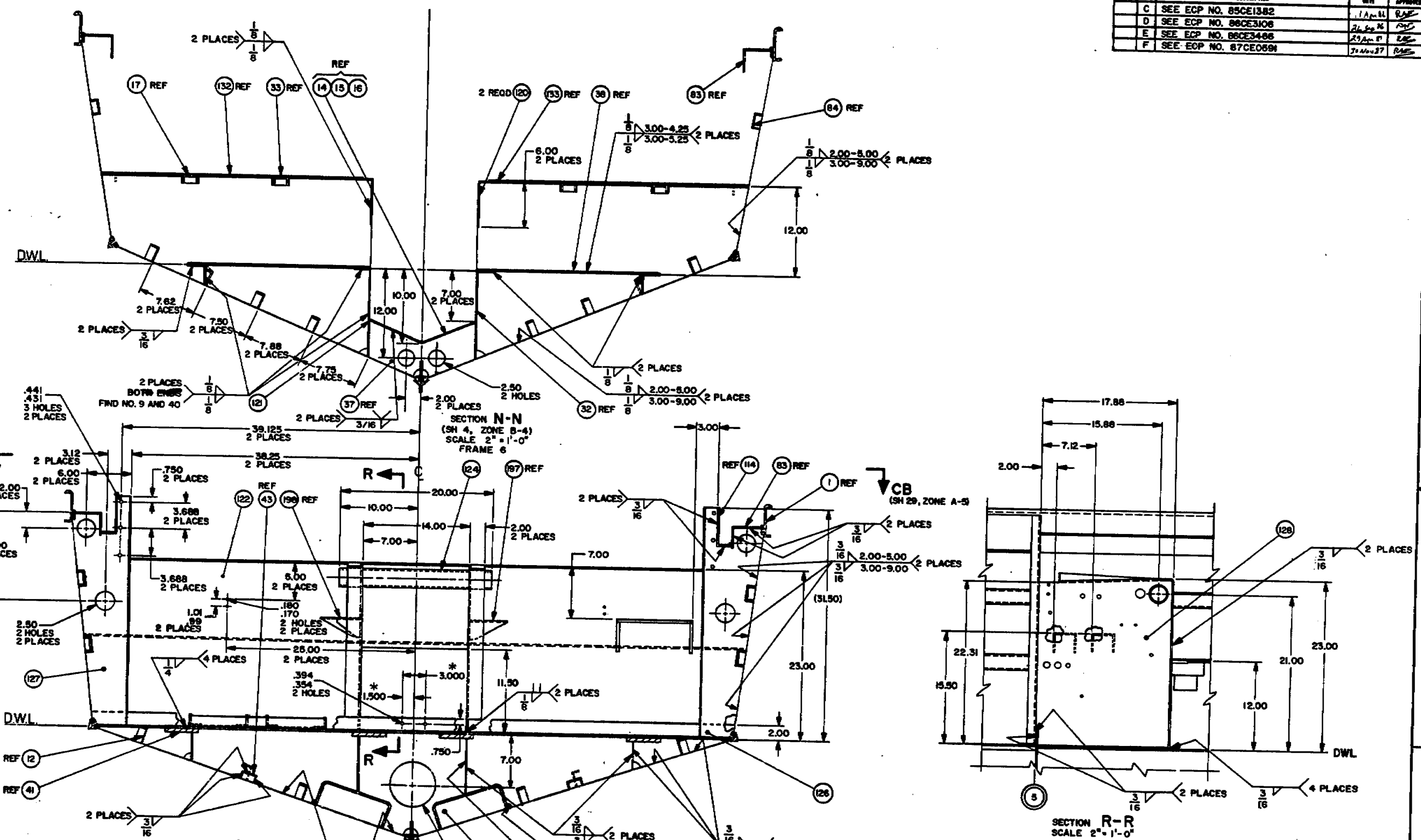

DRAWN BY LAM	DATE 8 DEC 83	U.S. ARMY MOBILITY EQUIPMENT RESEARCH AND DEVELOPMENT COMMAND FORT BELVOIR, VIRGINIA 22060
CHECKED BY		HULL STRUCTURE, USCSB MK 2
CONTRACT NO.		
DESIGN APPROVAL	DATE 4 Jan 84	
APPROVED FOR PROCUREMENT	DATE OF CONT AWD	SIZE A1 · FSCM 97403 · DWG NO. 13226E0449 · SCALE · SHEET 12

DO NOT SCALE THIS DRAWING

FOR INTERPRETATION OF DRAWING DOD-STD-100 APPLIES

SHARP EDGES TO

FILLET RADIUS TO

REVISED

REVISIONS				
ZONE	LTR	DESCRIPTION	DATE	APPROVED
	C	SEE ECP NO. 85CE1382	11 Apr 86	KAF
	E	SEE ECP NO. 86CE3466	29 Apr 87	RAE
	F	SEE ECP NO. 87CE0591	30 Nov 87	RAE

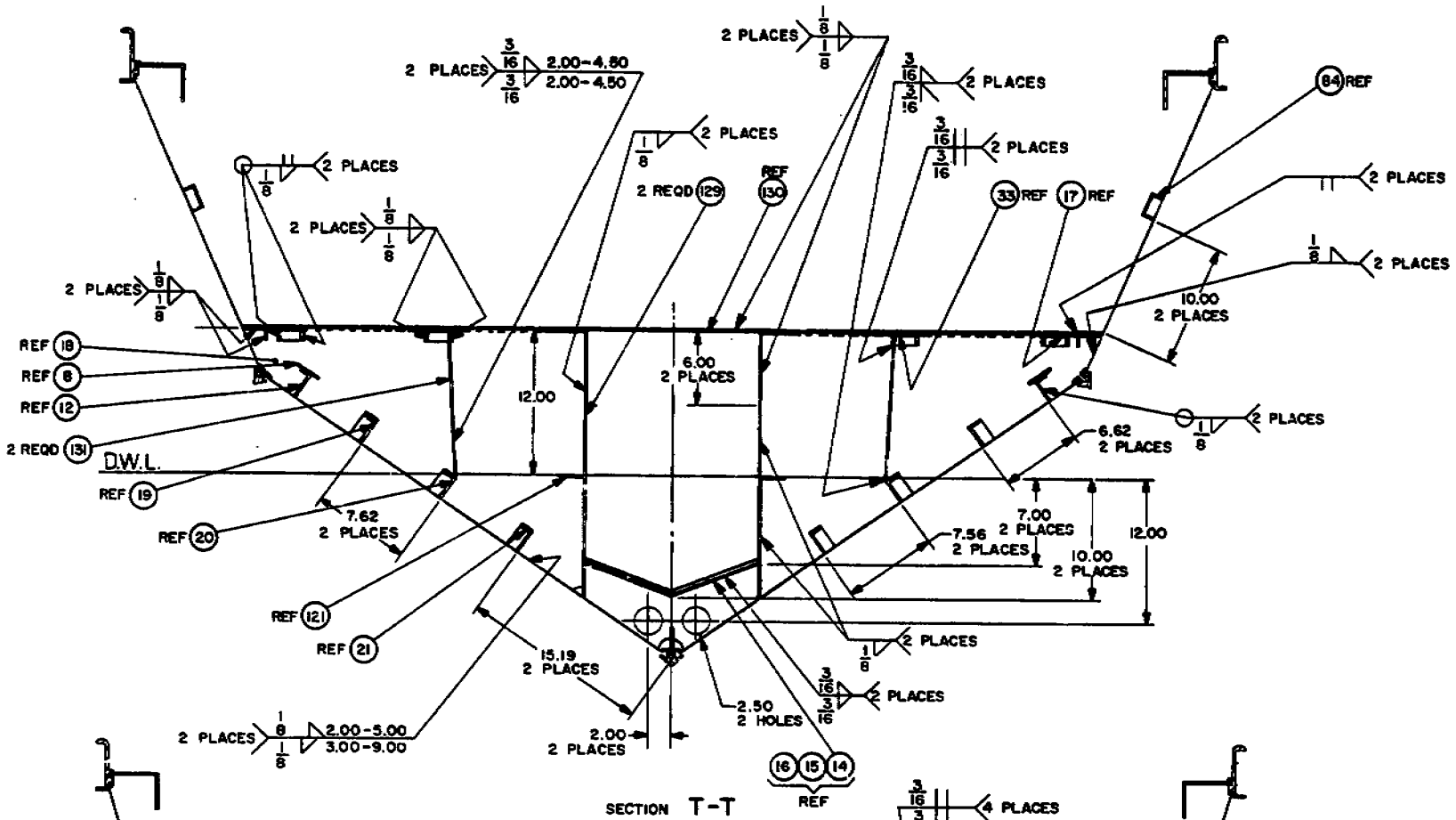

SECTION T-T
(SH 4, ZONE B-3)
SCALE 2" = 1'-0"
FRAME 8

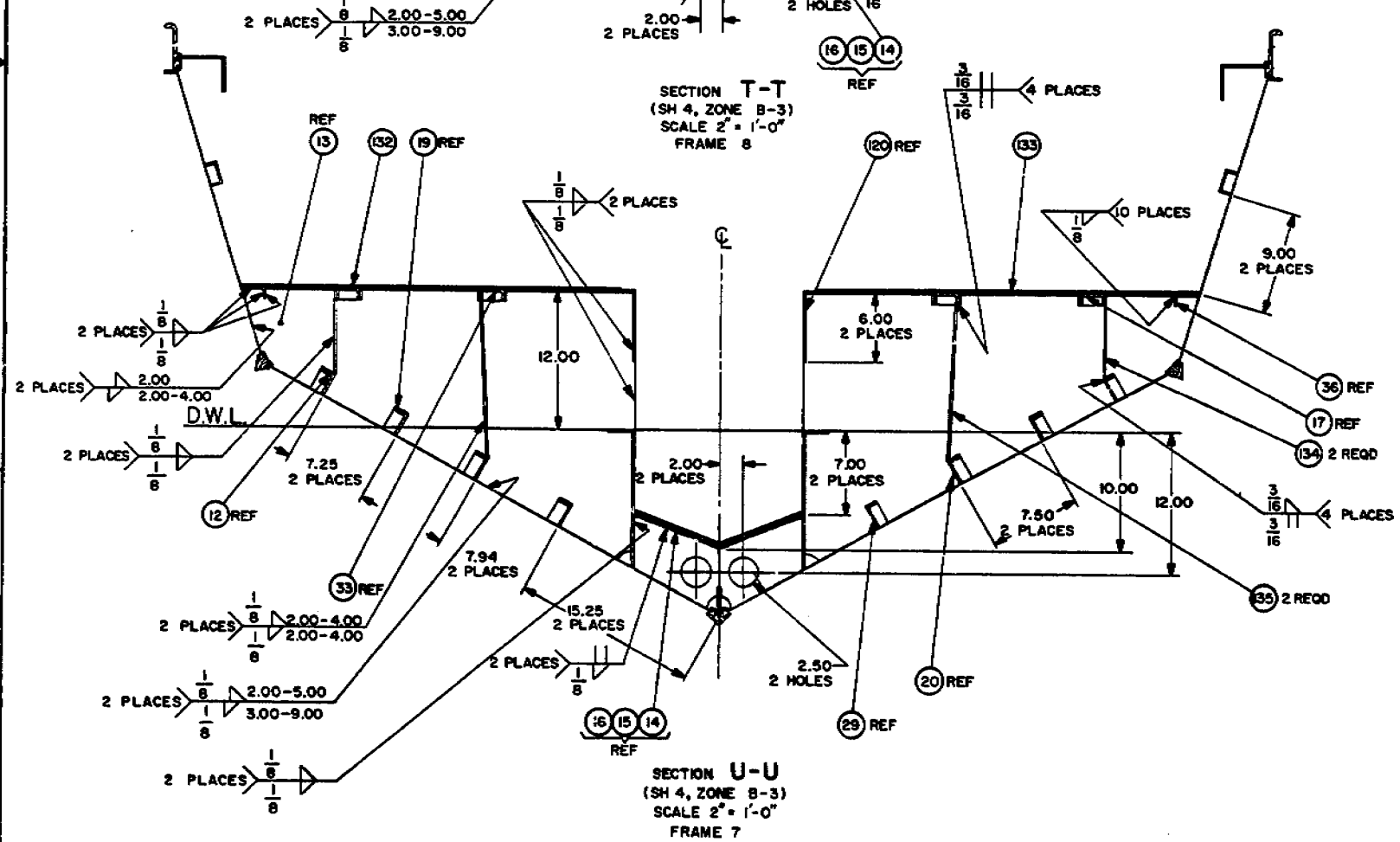

SECTION U-U
(SH 4, ZONE B-3)
SCALE 2" = 1'-0"
FRAME 7

UNLESS OTHERWISE SPECIFIED DIM/TOLERANCES ARE: per IPL
DIM PLACE (.X) ±
TWO PLACE (.XX) ±
THREE PLACE (.XXX) ±
ANGLES ±
TYPE ANGLE PROJECTION
DO NOT SCALE THIS DRAWING
FOR INTERPRETATION OF DRAWING DOD STD-100 APPLIES
REMOVE BURRS AND BREAK SHARP EDGES
SHARP EDGES
SHEET CODE
MATERIAL

DRAWN BY THC
DATE 8 DEC 83
CHECKED BY EFB QC
DATE 29 Dec 83
CONTRACT NO
DESIGN APPROVAL
DATE 4 Jan 84
APPROVED FOR SUBCONTRACT
DATE

U.S. ARMY MOBILITY EQUIPMENT
RESEARCH AND DEVELOPMENT COMMAND
FORT BELVOIR, VIRGINIA 22060

HULL STRUCTURE, USCSB MK 2

SIZE A1 | FSCM 97403 | DWG NO. 13226E0449
SCALE | SHEET 13

ZONE	LTR	REVISIONS DESCRIPTION	DATE	APPROVED
	A	SEE ECP NO. 84HE0841	[illegible]	[illegible]
	C	SEE ECP NO. 85CE1382	[illegible]	[illegible]
	E	SEE ECP NO 86CE3466	[illegible]	[illegible]

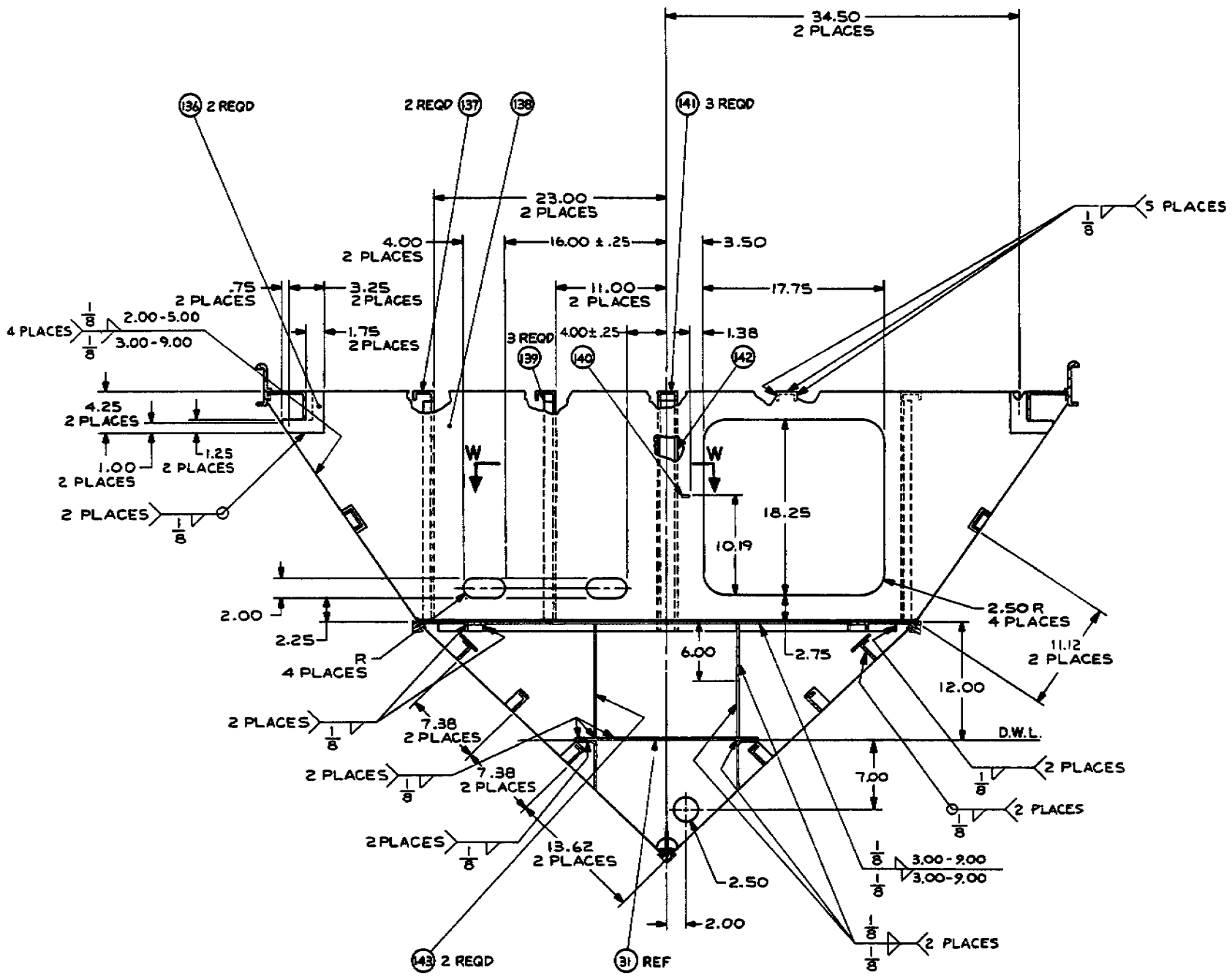

SECTION V-V
(SH 4, ZONE B-2)
SCALE 2" = 1'-0"
FRAME 9

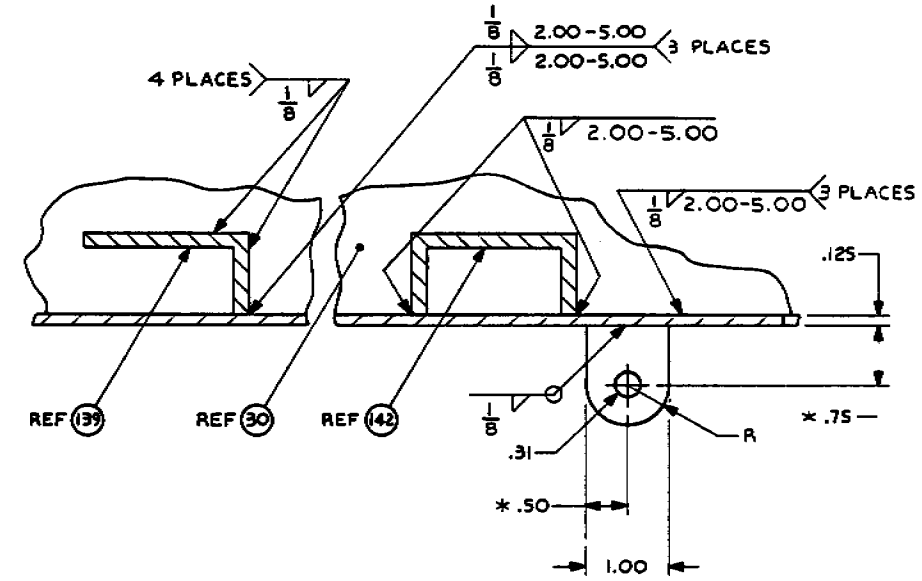

SECTION W-W
SCALE 1/1

UNLESS OTHERWISE SPECIFIED DIM/TOLERANCES ARE per MIL
ONE PLACE (.3) ±
TWO PLACE (.03) ±
THREE PLACE (.003) ±
ANGLES ±
THIRD ANGLE PROJECTION
DO NOT SCALE THIS DRAWING
FOR INTERPRETATION OF DRAWING DOD STD 100 APPLIES
REMOVE BURRS AND BREAK SHARP EDGES
SHARP EDGES .10
FILLET RADIUS .10
MATERIAL

DRAWN BY THC
DATE 6 DEC 83
CHECKED BY [illegible]
DATE 29 Dec 83
CONTRACT NO
DESIGN APPROVAL [illegible]
DATE [illegible]
APPROVED FOR PROCUREMENT R. E. Hill
DATE [illegible]

U.S. ARMY MOBILITY EQUIPMENT
RESEARCH AND DEVELOPMENT COMMAND
FORT BELVOIR, VIRGINIA 22060

HULL STRUCTURE, USCSB MK 2

SIZE	FSCM	DWG NO
A1	97403	13226E0449

SCALE SHEET 14

ZONE	LTR	DESCRIPTION	DATE	APPROVED
	B	SEE ECP NO. 84CE1204R1	10 OCT 84	[illegible]
	C	SEE ECP NO. 85CE1382	11 Apr 86	[illegible]
	E	SEE ECP NO. 86CE3466	29 Apr 87	[illegible]
	F	SEE ECP NO. 87CE0591	30 Nov 87	[illegible]

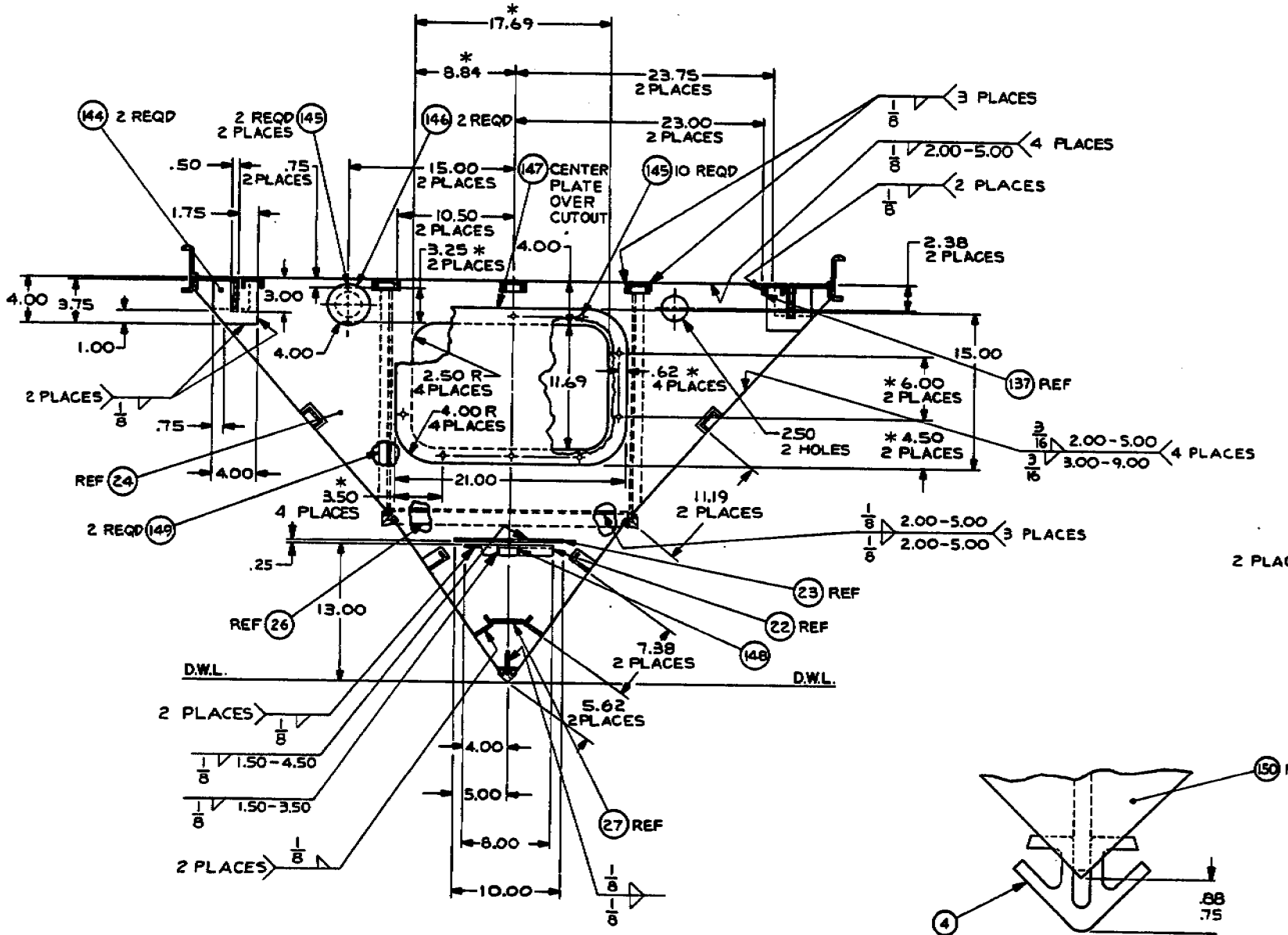

SECTION Y-Y
(SH 4, ZONE B-2)
SCALE 2" = 1'-0"
FRAME 10

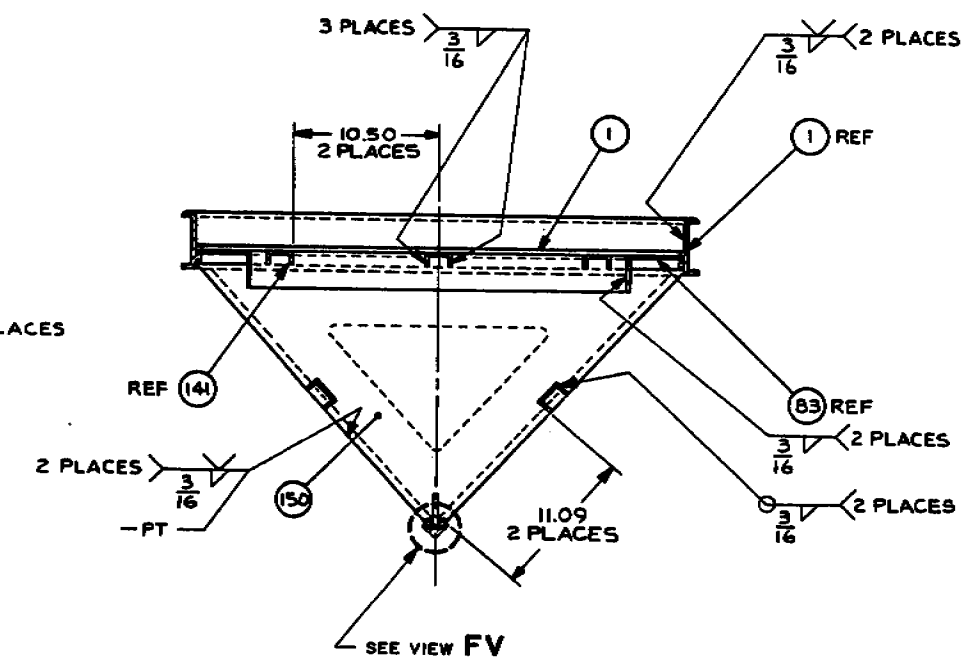

SECTION AA-AA
(SH 4, ZONE B-1)
SCALE 2" = 1'-0"
ITEMS NOT SHOWN
OMITTED FOR CLARITY

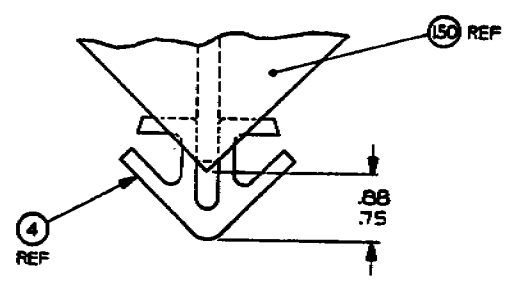

VIEW FV
SCALE 1/1
FROM OUTSIDE OF HULL

UNLESS OTHERWISE SPECIFIED DIM/TOLERANCES ARE per std.
ONE PLACE (.X) ±
TWO PLACE (.XX) ±
THREE PLACE (.XXX) ±
ANGLES ±
THIRD ANGLE PROJECTION
DO NOT SCALE THIS DRAWING
FOR INTERPRETATION OF DRAWING DOD STD-100 APPLIES
REMOVE BURRS AND BREAK SHARP EDGES
SHARP CORNERS TO
FILLET RADIUS TO
MATERIAL

DRAWN BY BHR
DATE 6 DEC 83
CHECKED BY [illegible]
CONTRACT NO
DESIGN APPROVAL [illegible]
DATE 4 Jan 84
APPROVED FOR ENGINEERING [illegible]
DATE [illegible]

U.S. ARMY MOBILITY EQUIPMENT
RESEARCH AND DEVELOPMENT COMMAND
FORT BELVOIR, VIRGINIA 22060

HULL STRUCTURE, USCSB MK 2

SIZE	FSCM	DWG NO.
A1	97403	13226E0449

SCALE
SHEET 15

REVISIONS				
ZONE	LTR	DESCRIPTION	DATE	APPROVED
	A	SEE ECP NO. 84HE0841	12 JUL 85	[illegible]
	B	SEE ECP NO. 84CE1204R1	10 OCT 85	[illegible]
	D	SEE ECP NO. 85CE1207R1	[illegible]	[illegible]
	E	SEE ECP NO. 86CE3466	[illegible]	[illegible]
	F	SEE ECP NO. 87CE0591	30 NOV 87	[illegible]
	J	SEE ECP NO. 88CE3858	[illegible]	[illegible]

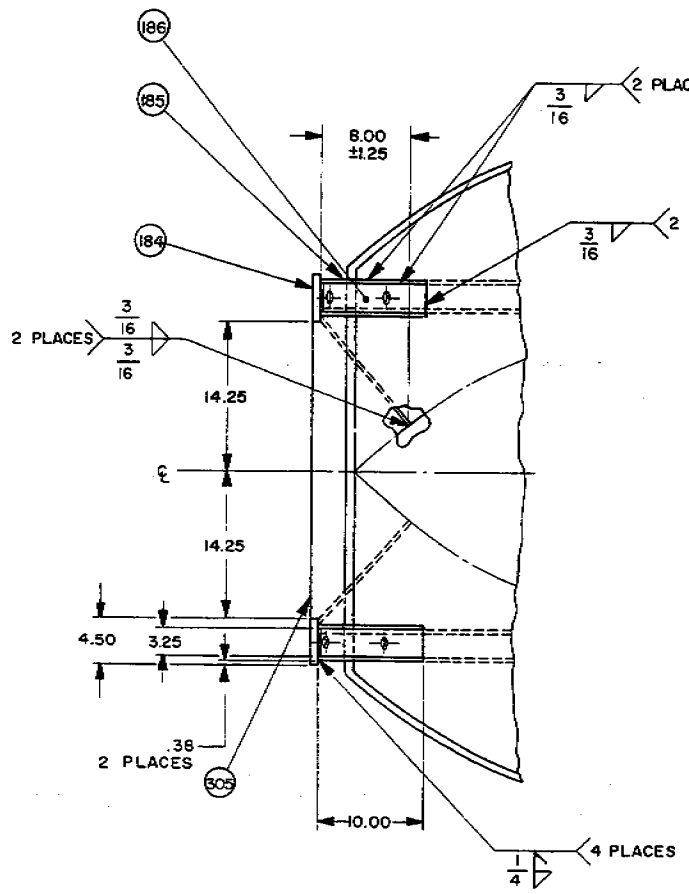

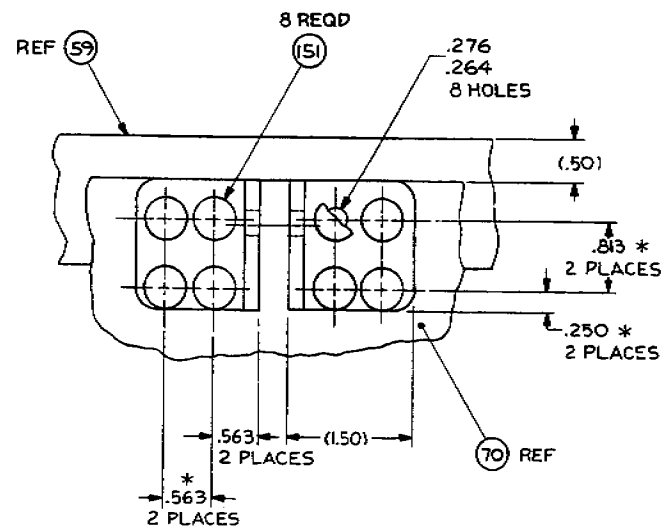

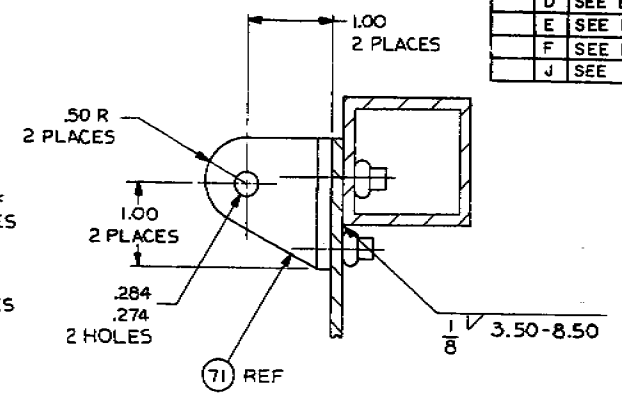

SECTION AC-AC
(SH 8, ZONE D-5)
SCALE 1/1
4 PLACES

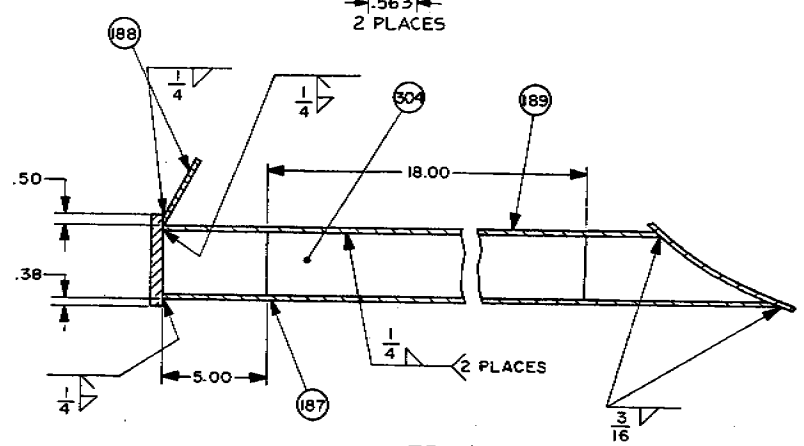

SECTION FP-FP
SCALE 1/4
2 PLACES

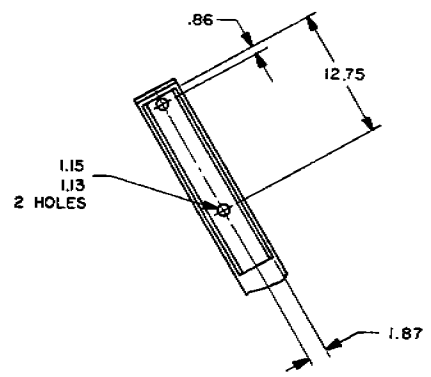

VIEW GD-GD
SCALE 1/8

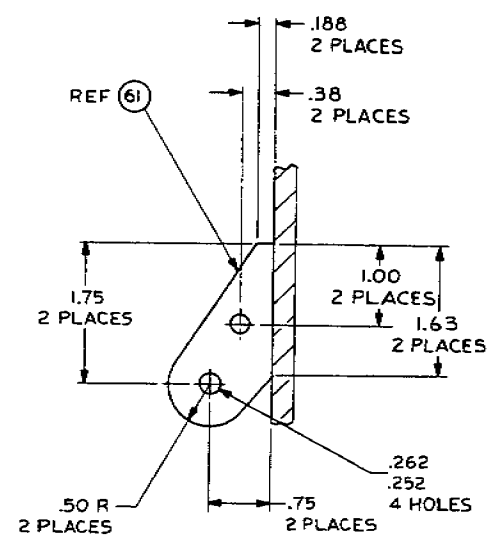

VIEW AE
(SH 8, ZONE C-1)
SCALE 1/1
2 PLACES

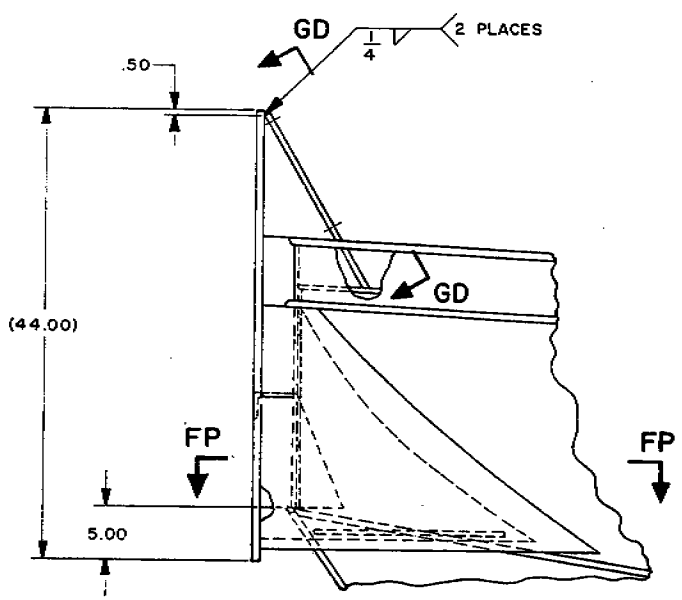

VIEW FN-FN
(SH 5, ZONE C-2)
SCALE 1/8
ROTATED 180°

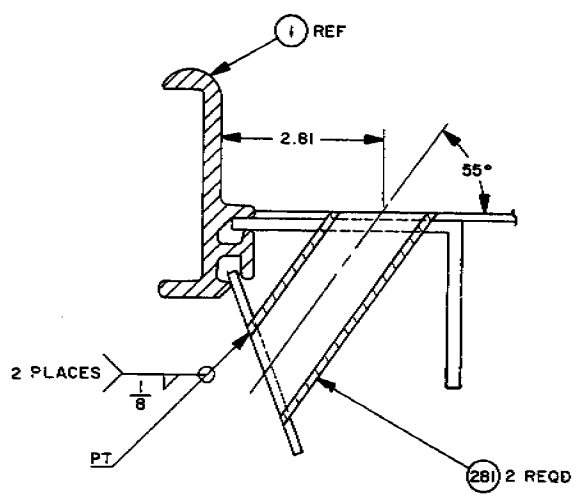

SECTION FL-FL
(SH 5, ZONE C-4)

UNLESS OTHERWISE SPECIFIED DIM/TOLERANCES ARE: (per ML)
ONE PLACE (.X) ±
TWO PLACE (.XX) ±
THREE PLACE (.XXX) ±
ANGLES ±
THIRD ANGLE PROJECTION
DO NOT SCALE THIS DRAWING
FOR INTERPRETATION OF DRAWING DOD-STD-100 APPLIES
REMOVE BURRS AND BREAK SHARP EDGES
SHARP EDGES TO
FILLET RADII TO
MATERIAL

DRAWN BY RLG
DATE 6 DEC 83
CHECKED BY [illegible] 29 DEC 83
CONTRACT NO
DESIGN APPROVAL John M. Hart
DATE 4 Jan 84
APPROVED FOR PROCUREMENT A. C. Hill
DATE 10 JAN 84

U.S. ARMY MOBILITY EQUIPMENT
RESEARCH AND DEVELOPMENT COMMAND
FORT BELVOIR, VIRGINIA 22060

HULL STRUCTURE, USCSB MK 2

SIZE	FSCM	DWG NO.
A1	97403	13226E0449

SCALE | SHEET 16

8. 11 17 22

REVISIONS				
ZONE	LTR	DESCRIPTION	DATE	APPROVED
	C	SEE ECP NO. 85CE1382	[illegible]	[illegible]
	D	SEE ECP NO. 86CE0557	[illegible]	[illegible]
	E	SEE ECP NO. 86CE3466	[illegible]	[illegible]

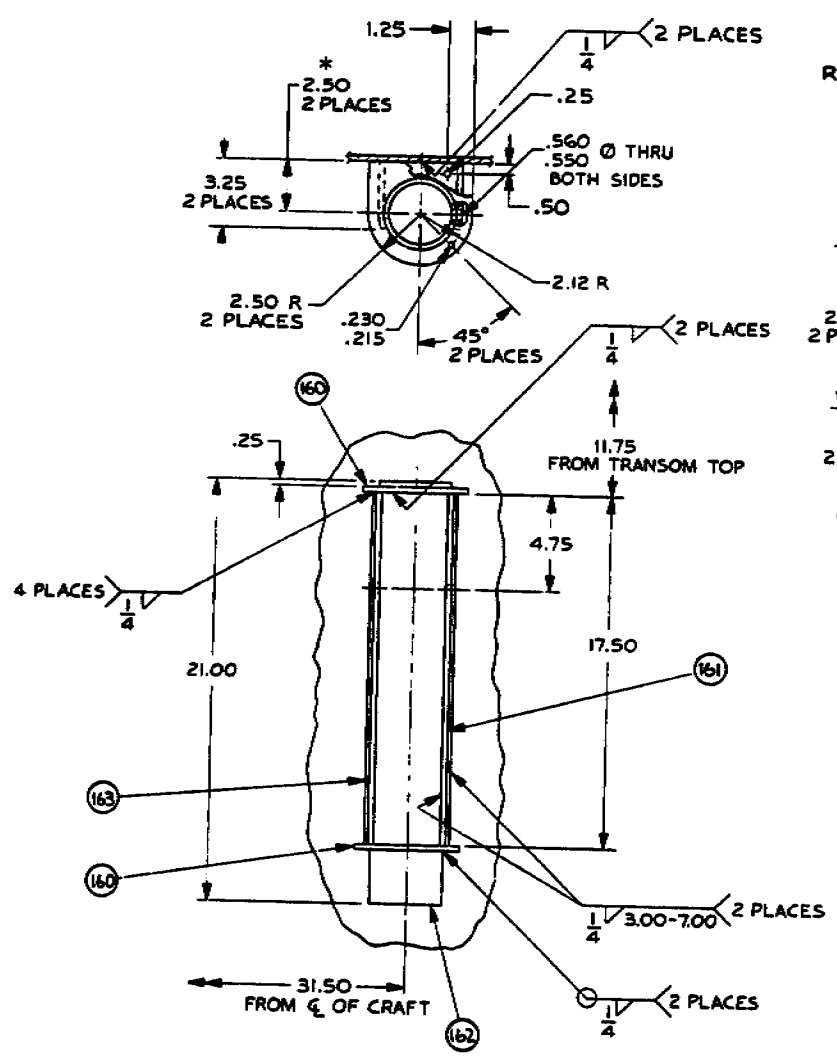

VIEW AF
(SH 8, ZONE A-5)
SCALE 1/4
2 PLACES
ITEMS NOT SHOWN
OMITTED FOR CLARITY

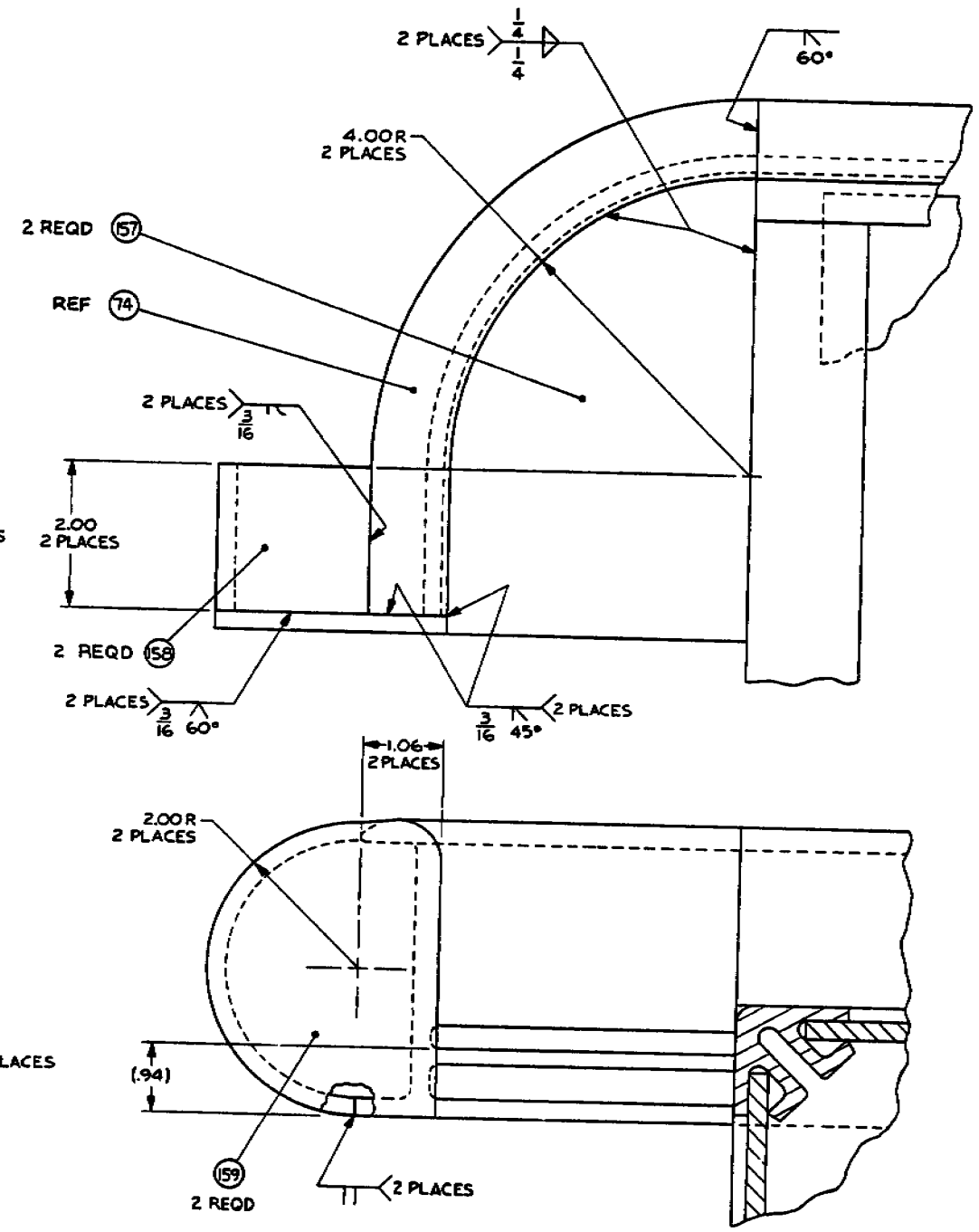

SECTION AG-AG
(SH 8, ZONE B-8)
SCALE 1/1
2 PLACES

UNLESS OTHERWISE SPECIFIED DIM/TOLERANCES ARE	DRAWN BY THC	DATE 8 DEC 83	U.S. ARMY MOBILITY EQUIPMENT RESEARCH AND DEVELOPMENT COMMAND FORT BELVOIR, VIRGINIA 22060
ONE PLACE (.X) ±	CHECKED BY		HULL STRUCTURE, USCSB MK 2
TWO PLACE (.XX) ±	CONTRACT NO		
THREE PLACE (.XXX) ±	DESIGN APPROVAL		SIZE A1 · FSCM 97403 · DWG NO 13226E0449
ANGLES ±	DATE		SCALE · SHEET 17
THIRD ANGLE PROJECTION	APPROVED FOR REQUIREMENT		
DO NOT SCALE THIS DRAWING	DATE		
FOR INTERPRETATION OF DRAWING DOD STD 100 APPLIES			
REMOVE BURRS AND BREAK SHARP EDGES			
SHARP EDGES .10			
FILLET RADIUS .10			
MATERIAL			

17"
11"
8.5"
8.5"
11"
17"
22"

ZONE	LTR	REVISIONS DESCRIPTION	DATE	APPROVED
	B	SEE ECP NO. 84CE1204R1	10 OCT 85	RAL
	C	SEE ECP NO. 85CE1382	11 Apr 86	RMD
	E	SEE ECP NO. 86CE3466	23 Apr 87	RMD
	F	SEE ECP NO. 87CE0591	30 Nov 87	RMD

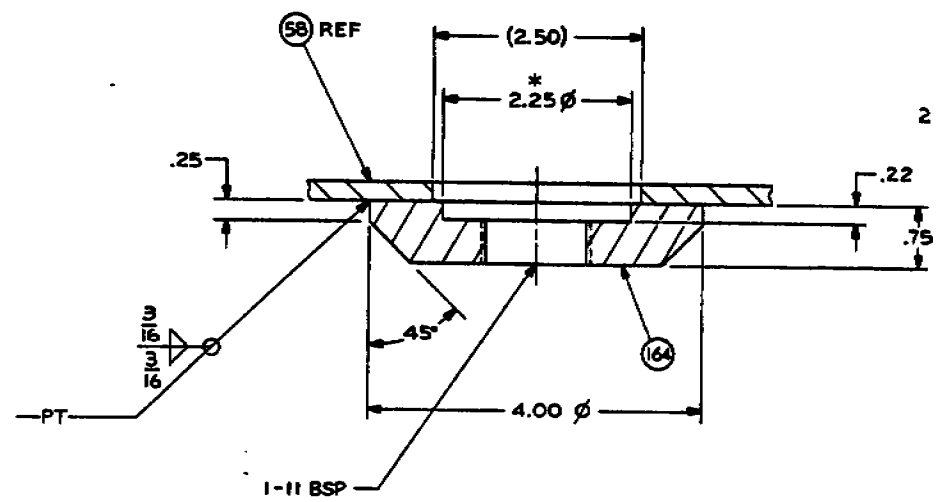

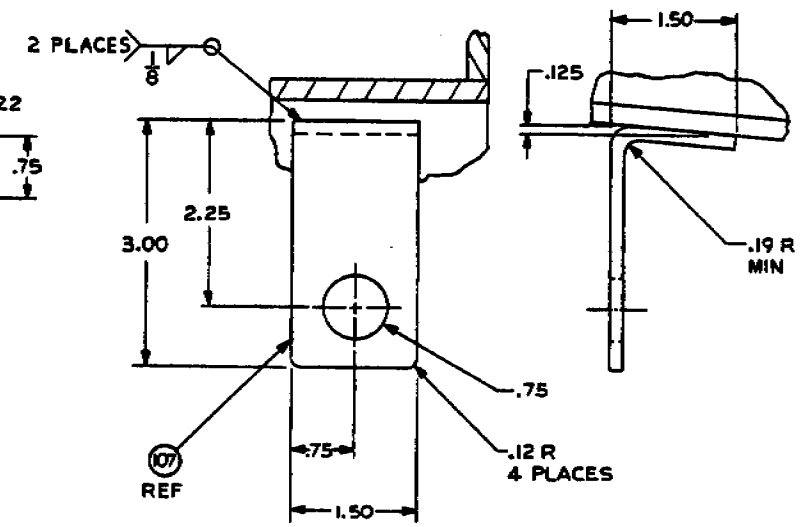

SECTION AK-AK
(SH 10, ZONE B-1)
SCALE 1/1

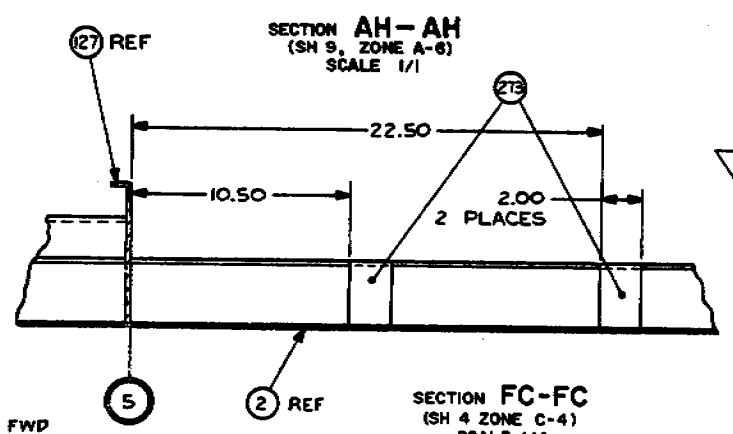

SECTION AH-AH
(SH 9, ZONE A-6)
SCALE 1/1

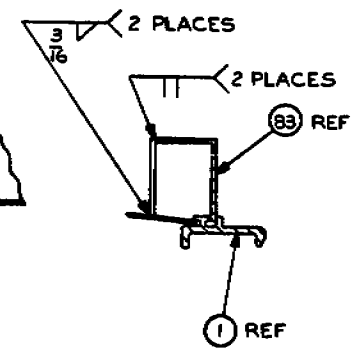

SECTION FC-FC
(SH 4 ZONE C-4)
SCALE 1/4

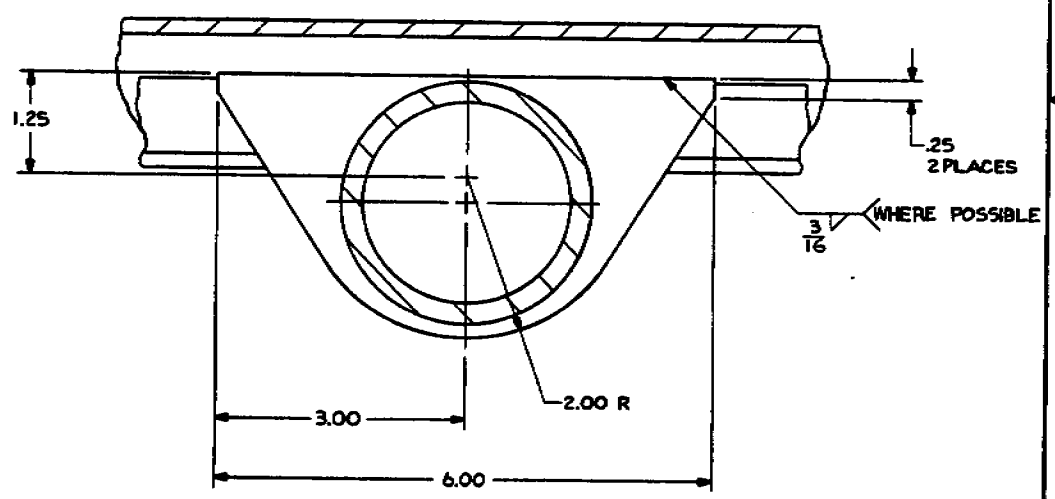

SECTION AL-AL
SCALE 1/1

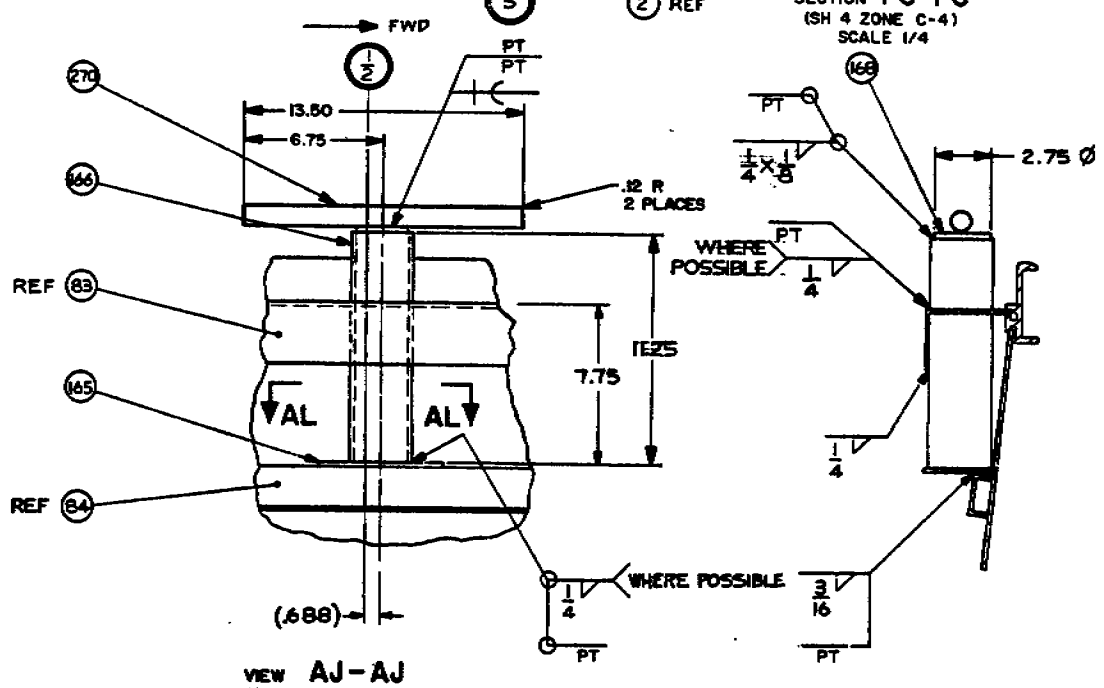

VIEW AJ-AJ
(SH 9, ZONE D-7)
SCALE 1/4

UNLESS OTHERWISE SPECIFIED DIM/TOLERANCES ARE per SPL
ONE PLACE (.2) ±
TWO PLACE (.22) ±
THREE PLACE (.222) ±
ANGLES ±
THIRD ANGLE PROJECTION
DO NOT SCALE THIS DRAWING
FOR INTERPRETATION OF DRAWING DOD-STD-100 APPLIES
REMOVE BURRS AND BREAK SHARP EDGES
SHARP EDGES 1R
FILLET RADII 1R
MATERIAL

DRAWN BY OTH
DATE 8 DEC 83
CHECKED BY V.J.S. Ross
CONTRACT NO
DATE APPROVED 4 Jan 84
APPROVED FOR DISTRIBUTION
DATE

U.S. ARMY MOBILITY EQUIPMENT
RESEARCH AND DEVELOPMENT COMMAND
FORT BELVOIR, VIRGINIA 22060

HULL STRUCTURE, USCSB MK 2

SIZE	TECH	DWG NO.
A1	97403	13226E0449

SCALE SHEET 1 OF

ZONE	LTR	REVISIONS DESCRIPTION	DATE	APPROVED
	D	SEE ECP NO. 85CE0104C1	25 Jan 84	RAF
	E	SEE ECP NO. 86CE3466	29 Aug 87	RAF

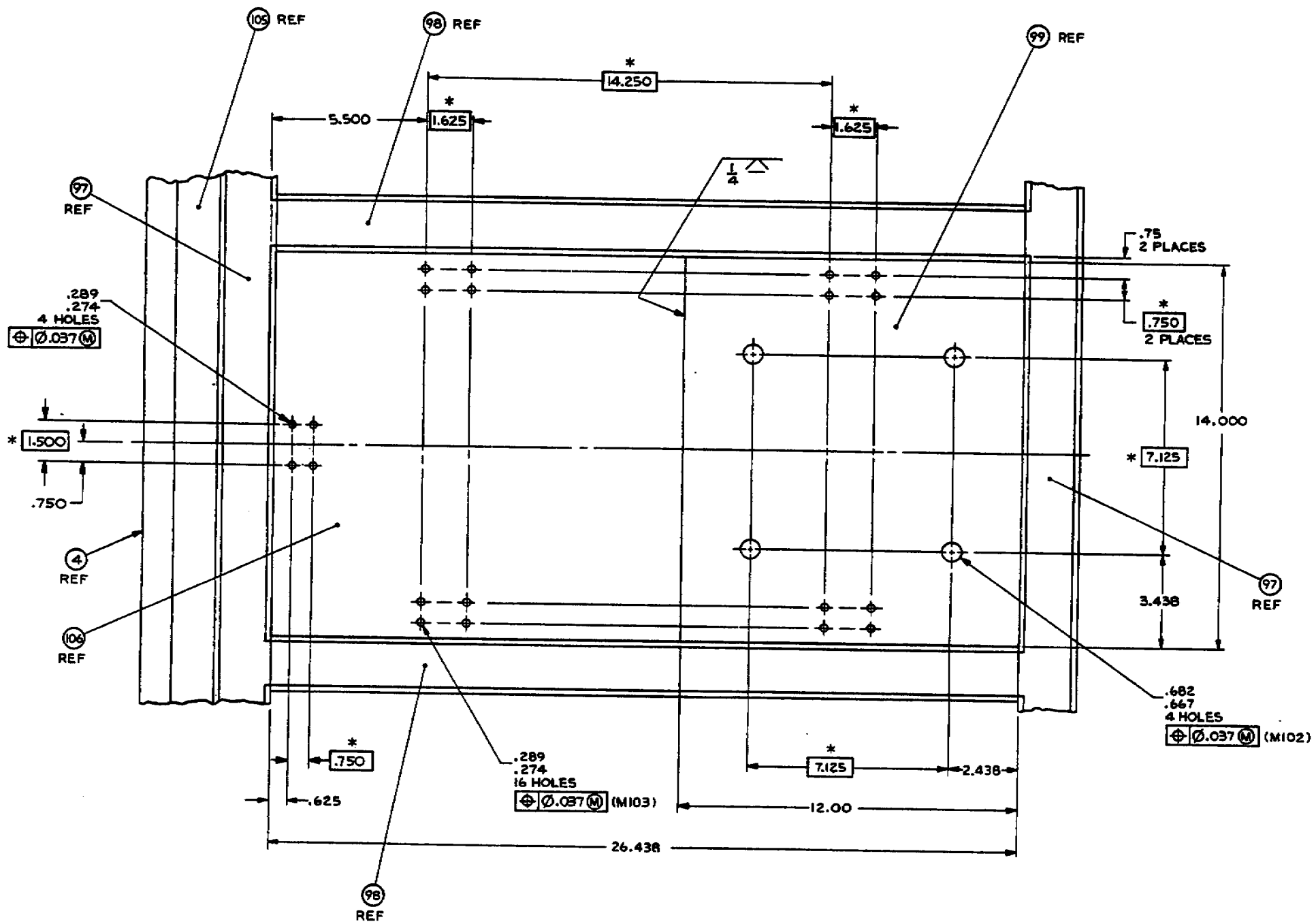

VIEW **AM-AM**
(SH10, ZONE C-4)

UNLESS OTHERWISE SPECIFIED DIM/TOLERANCES ARE per INT.
ONE PLACE (.X) ±
TWO PLACE (.XX) ±
THREE PLACE (.XXX) ±
ANGLES ±
THIRD ANGLE PROJECTION
DO NOT SCALE THIS DRAWING
FOR INTERPRETATION OF DRAWINGS DOD STD 100 APPLIES
REMOVE BURRS AND BREAK SHARP EDGES
SHARP CORNERS TO
FILLET RADII TO
MATERIAL

DRAWN BY TNC — DATE 7 DEC 83
CHECKED BY — DATE
ESOTRACT NO
DESIGN APPROVAL — DATE 4 Jan 84
APPROVED FOR PROCUREMENT
DATE OF PROC PO

U.S. ARMY MOBILITY EQUIPMENT
RESEARCH AND DEVELOPMENT COMMAND
FORT BELVOIR, VIRGINIA 22060

HULL STRUCTURE, USCSB MK 2

SIZE	FSCM	DWG NO.
A1	97403	13226E0449

SCALE — SHEET OF

ZONE	LTR	DESCRIPTION	DATE	APPROVED
	C	SEE ECP NO. 85CE1382	11 Apr 84	RAE

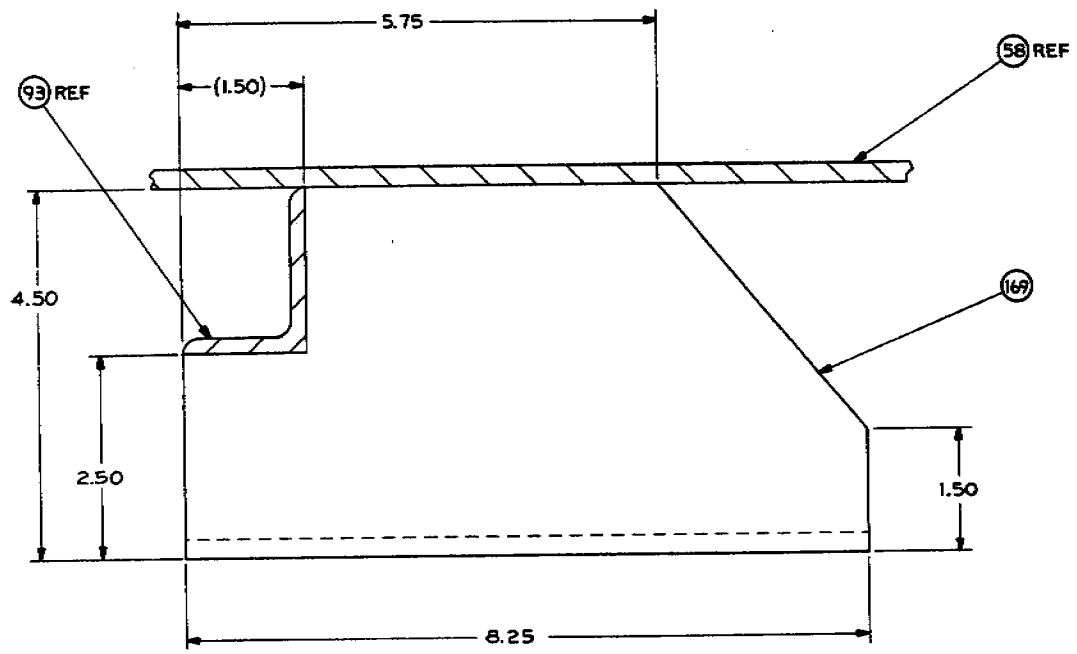

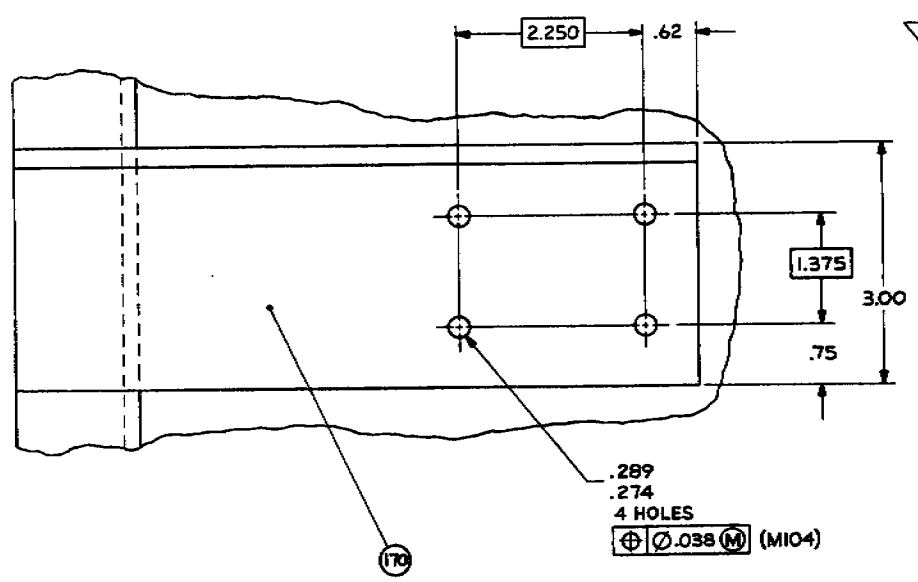

VIEW AN
(SH 9, ZONE B-5)
SCALE 1/1
PORT SIDE ONLY

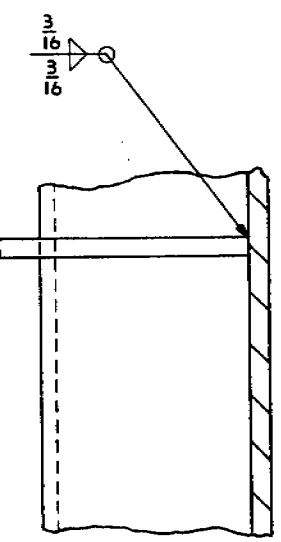

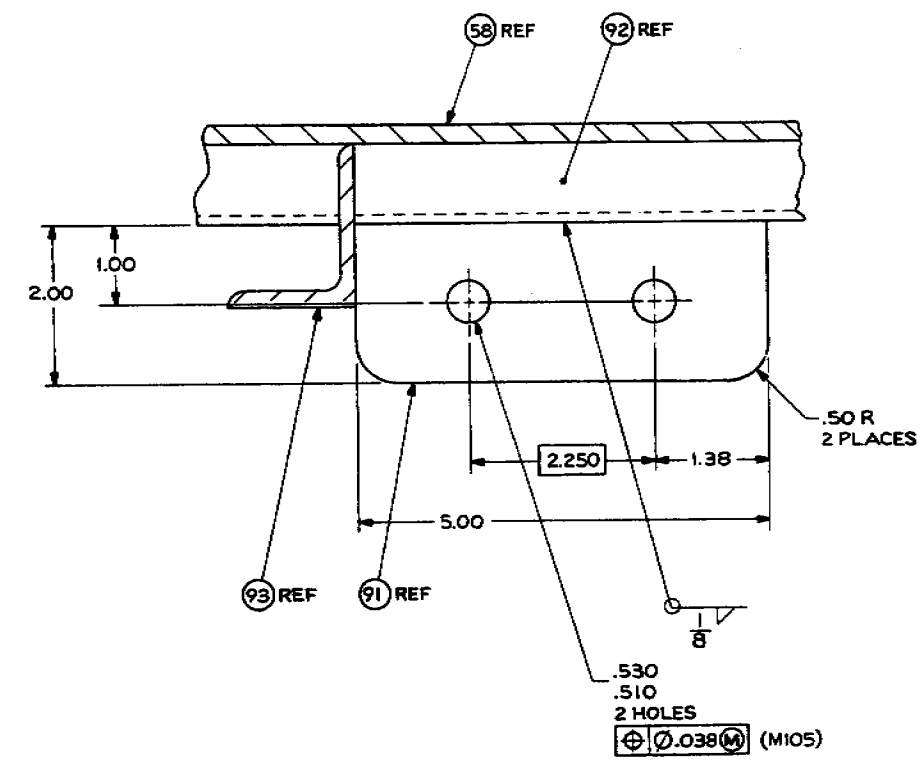

SECTION AP-AP
(SH 9, ZONE B-7)
SCALE 1/1

UNLESS OTHERWISE SPECIFIED DIM/TOLERANCES ARE - per STD.
ONE PLACE (.X) ±
TWO PLACE (.XX) ±
THREE PLACE (.XXX) ±
ANGLES ±
THIRD ANGLE PROJECTION
DO NOT SCALE THIS DRAWING
FOR INTERPRETATION OF DRAWING DOD-STD-100 APPLIES
REMOVE BURRS AND BREAK SHARP EDGES
SHARP EDGES TO
FILLET RADII TO
MATERIAL

DRAWN BY DTH DATE 11 NOV 81
CHECKED BY J.B. Pierce DATE 29 Dec 83
CONTRACT NO
DESIGN APPROVAL John M. Hirst DATE 4 Jan 84
APPROVED FOR PROCUREMENT R. G. Hirst DATE 4 Jan 84

U.S. ARMY MOBILITY EQUIPMENT
RESEARCH AND DEVELOPMENT COMMAND
FORT BELVOIR, VIRGINIA 22060

HULL STRUCTURE,
USCSB MK 2

SIZE	FSCM	DWG NO.
A1	97403	13226E0449

SCALE SHEET 20

ZONE	LTR	REVISIONS DESCRIPTION	DATE	APPROVED
	A	SEE ECP NO 84HE0841	12 JUL 85	[illegible]
	C	SEE ECP NO. 85CE1382	11 APR 86	[illegible]
	D	SEE ECP NO. 85CE1025	[illegible]	[illegible]
	E	SEE ECP NO. 86CE3466	[illegible]	[illegible]
	F	SEE ECP NO. 87CE0591	[illegible]	[illegible]
	G	SEE ECP NO. 85CV1502R5	[illegible]	[illegible]

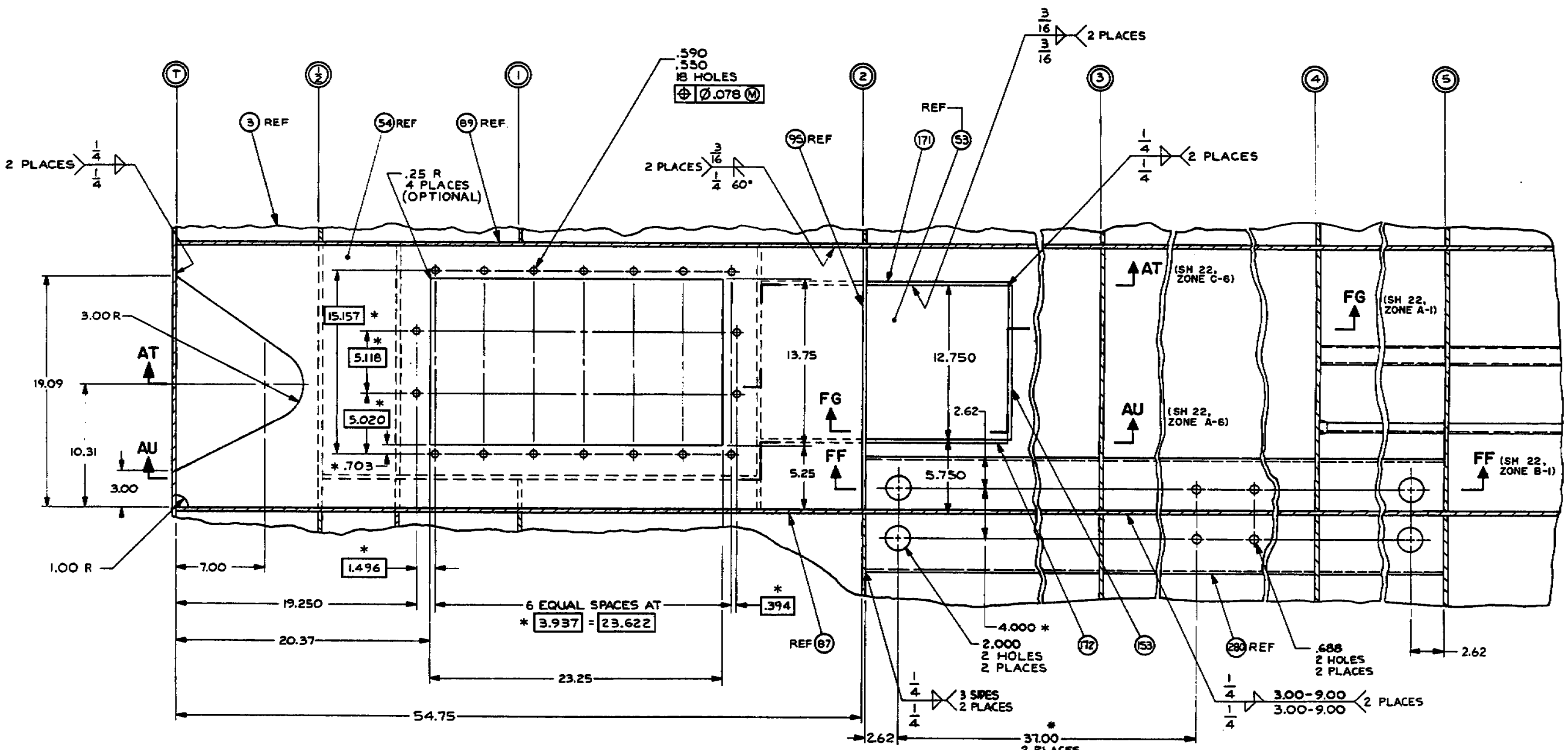

SECTION AR-AR
(SH 9, ZONE A-5)
SCALE 1/4
ROTATED 81° CCW

UNLESS OTHERWISE SPECIFIED DIM/TOLERANCES ARE IN.
ONE PLACE (.X) ±
TWO PLACE (.XX) ±
THREE PLACE (.XXX) ±
ANGLES ±
THIRD ANGLE PROJECTION
DO NOT SCALE THIS DRAWING
FOR INTERPRETATION OF DRAWING DOD STD 100 APPLIES
REMOVE BURRS AND BREAK SHARP EDGES
SHARP EDGES TO
FILLET RADII TO
MATERIAL

DRAWN BY MA DATE 8 DEC 83
CHECKED BY [illegible] 29 DEC 83
CONTRACT NO
DESIGN APPROVAL [illegible]
DATE [illegible]
APPROVED FOR PROCUREMENT [illegible]
DATE [illegible]

U.S. ARMY MOBILITY EQUIPMENT
RESEARCH AND DEVELOPMENT COMMAND
FORT BELVOIR, VIRGINIA 22060

HULL STRUCTURE, USCSB MK 2

SIZE	FSCM	DWG NO
A1	97403	13226E0449

SCALE SHEET 21

REVISIONS				
ZONE	LTR	DESCRIPTION	DATE	APPROVED
	B	SEE ECP NO. 84CE1204RL	10 OCT 85	
	C	SEE ECP NO. 85CE1382	11 Apr 86	
	E	SEE ECP NO. 86CE3466	29 Apr 87	
	F	SEE ECP NO. 87CE059N	20 Nov 87	

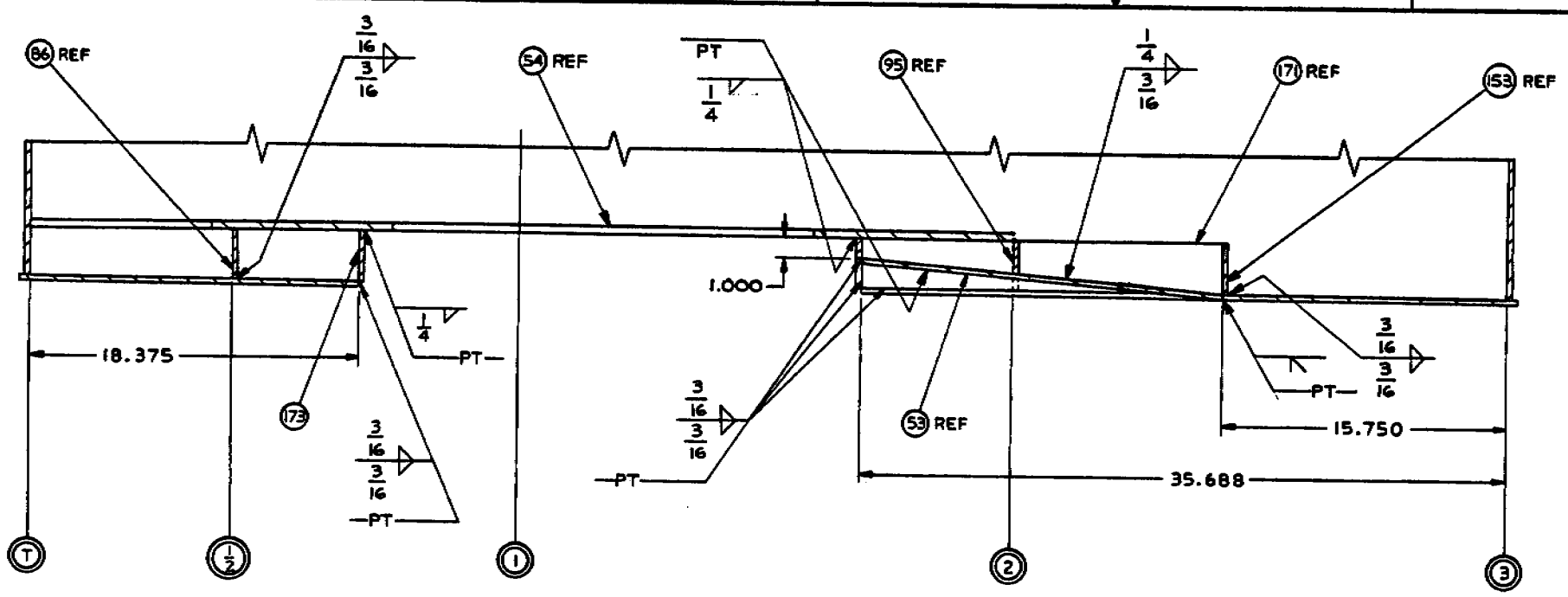

SECTION AT-AT
(SH 21, ZONE C-2)
SCALE 1/4

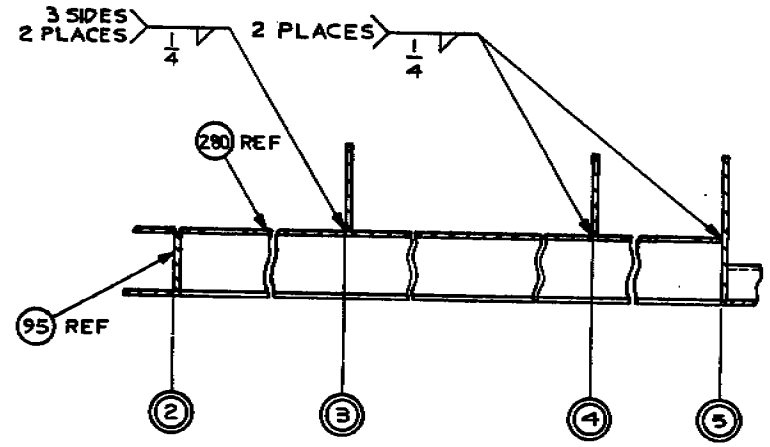

SECTION FF-FF
(SH 21, ZONE B-1)
SCALE 1/4

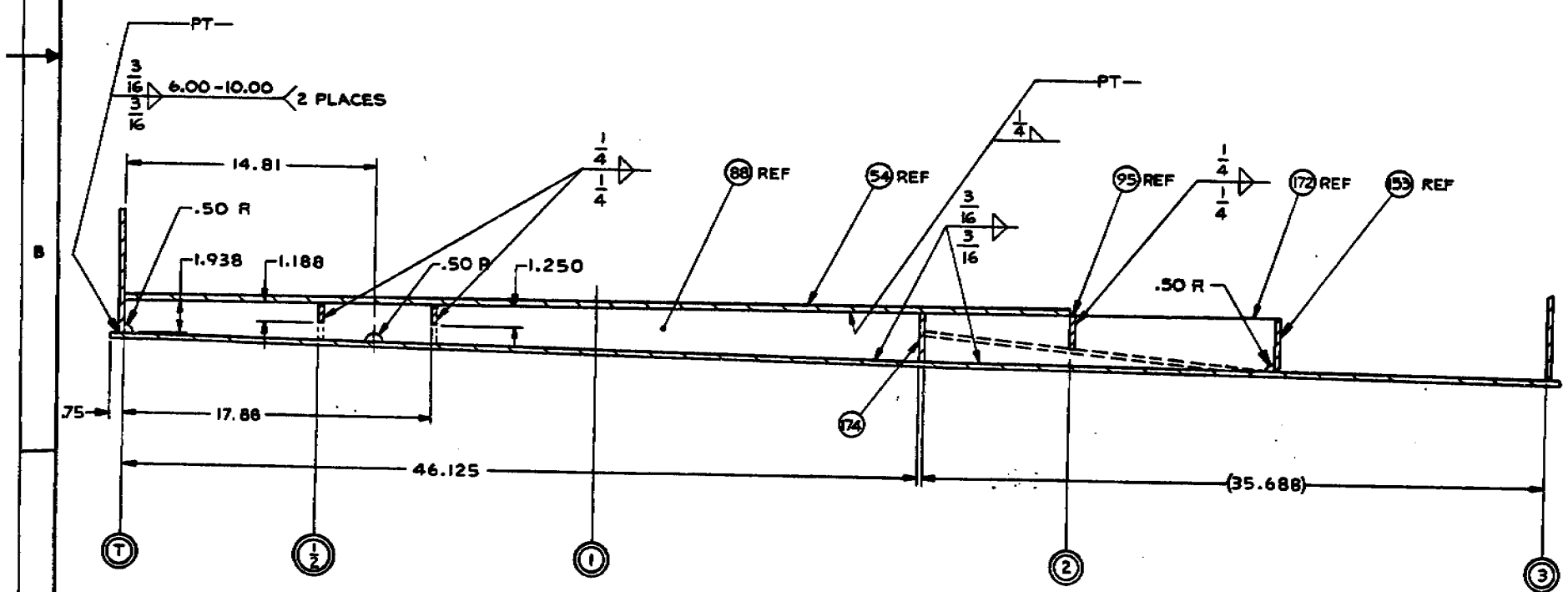

SECTION AU-AU
(SH 21, ZONE B-2)
SCALE 1/4

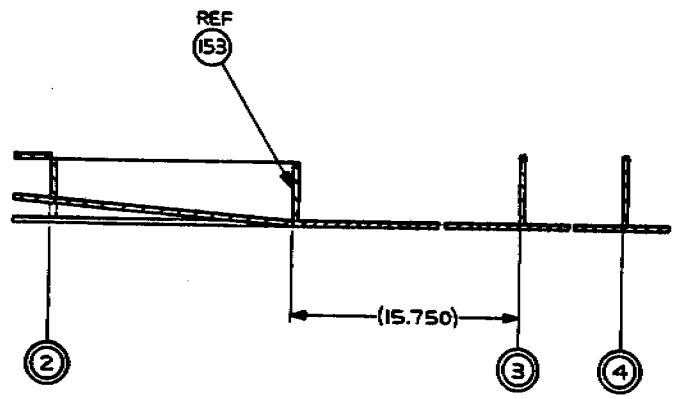

SECTION FG-FG
(SH 21, ZONE C-1)
SCALE 1/4

UNLESS OTHERWISE SPECIFIED DIM/TOLERANCES ARE
ONE PLACE (.X) ±
TWO PLACE (.XX) ±
THREE PLACE (.XXX) ±
ANGLES ±
THIRD ANGLE PROJECTION
DO NOT SCALE THIS DRAWING
FOR INTERPRETATION OF DRAWING DOD-STD-100 APPLIES
REMOVE BURRS AND BREAK SHARP EDGES
SHARP EDGES YD
FILLET RADII YD
MATERIAL

DRAWN BY HA
DATE 9 DEC 83
CHECKED BY
DATE
CONTRACT NO
DESIGN APPROVED John M. Hart
DATE 4 Jan 84
APPROVED FOR PROCUREMENT R. E. Shirk
DATE 4 Jan 84

U.S. ARMY MOBILITY EQUIPMENT
RESEARCH AND DEVELOPMENT COMMAND
FORT BELVOIR, VIRGINIA 22060

HULL STRUCTURE, USCSB MK 2

SIZE	FSCM	DWG NO
A1	97403	13226E0449

SCALE SHEET 22

ZONE	LTR	REVISIONS DESCRIPTION	DATE	APPROVED
	C	SEE ECP NO. 85CE1382	[illegible]	[illegible]
	E	SEE ECP NO. 86CE3466	[illegible]	[illegible]

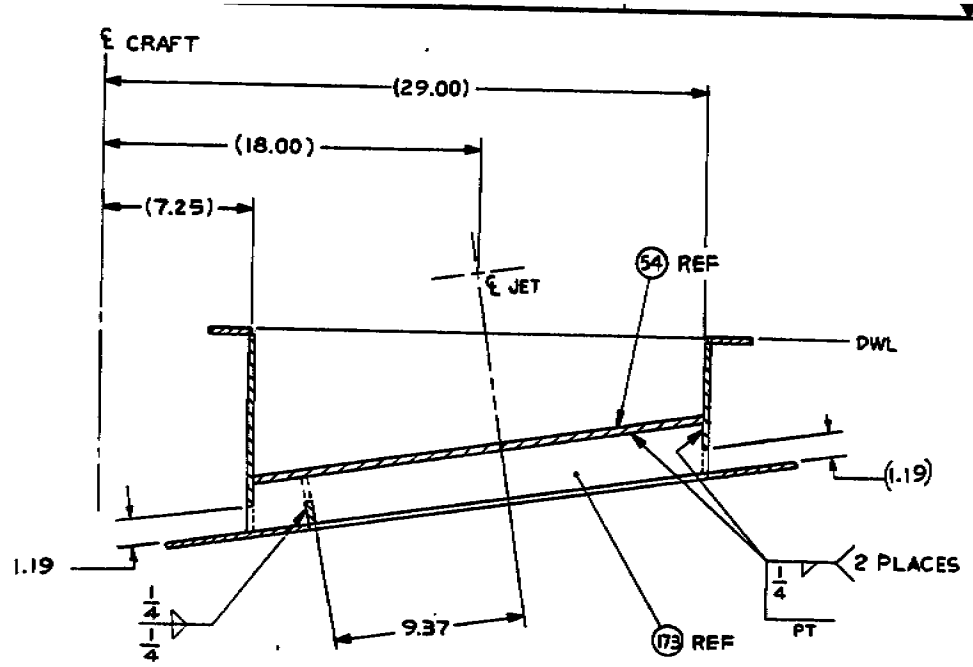

SECTION AV-AV
(SH 7, ZONE C-8)
SCALE 1/4

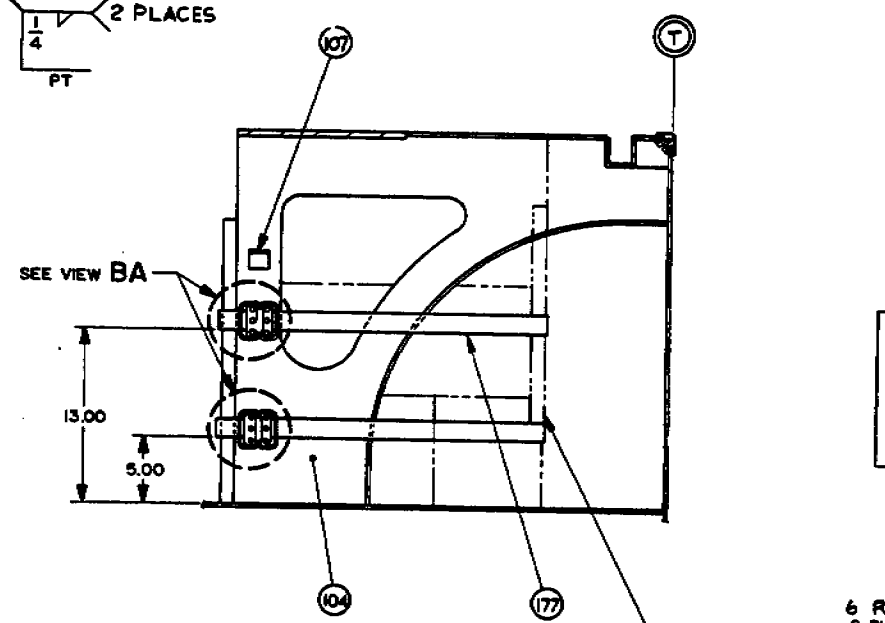

SECTION AY-AY
(SH 10, ZONE B-6)
SCALE 2"=1'-0"

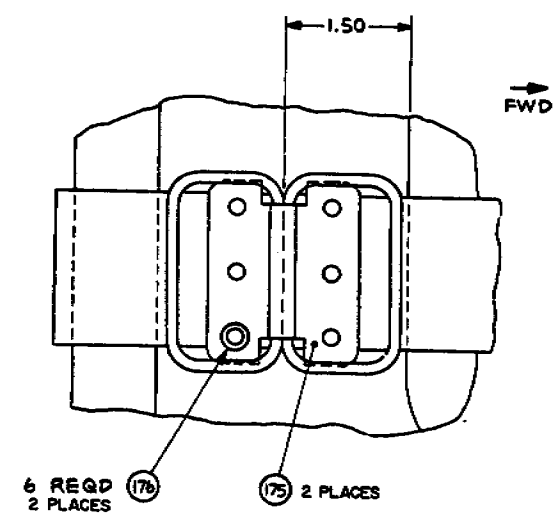

VIEW BA
SCALE 1/1

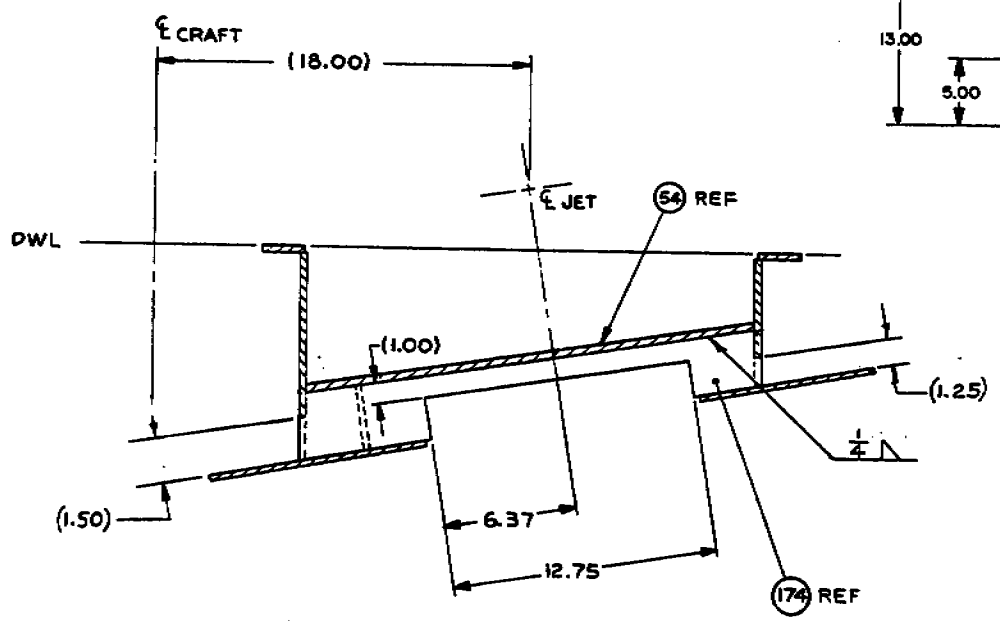

SECTION AW-AW
(SH 7, ZONE C-7)
SCALE 1/4
ITEMS NOT SHOWN
OMITTED FOR CLARITY

UNLESS OTHERWISE SPECIFIED DIMENSIONS AND TOLERANCES ARE IN.
ONE PLACE (.X) ±
TWO PLACE (.XX) ±
THREE PLACE (.XXX) ±
ANGLES ±
THIRD ANGLE PROJECTION
DO NOT SCALE THIS DRAWING
FOR INTERPRETATION OF DRAWING DOD STD-100 APPLIES
REMOVE BURRS AND BREAK SHARP EDGES
SHARP EDGES TO
FILLET RADII TO
MATERIAL

DRAWN BY HA
DATE 7 DEC 83
CHECKED BY [illegible] ETB G.C.
CONTRACT NO
DESIGN APPROVAL [illegible] 4 Jan 84
APPROVED FOR PROCUREMENT [illegible]

U.S. ARMY MOBILITY EQUIPMENT
RESEARCH AND DEVELOPMENT COMMAND
FORT BELVOIR, VIRGINIA 22060

HULL STRUCTURE, USCSB MK 2

SIZE	FSCM	DWG NO
A1	97403	13226E0449

SCALE
SHEET 23

REVISIONS				
ZONE	LTR	DESCRIPTION	DATE	APPROVED
	C	SEE ECP NO. 86CE1382	11 Apr 86	RAE
	E	SEE ECP NO. 86CE3466	29 Apr 87	RAE
	F	SEE ECP NO. 87CE0591	30 Nov 87	RAE

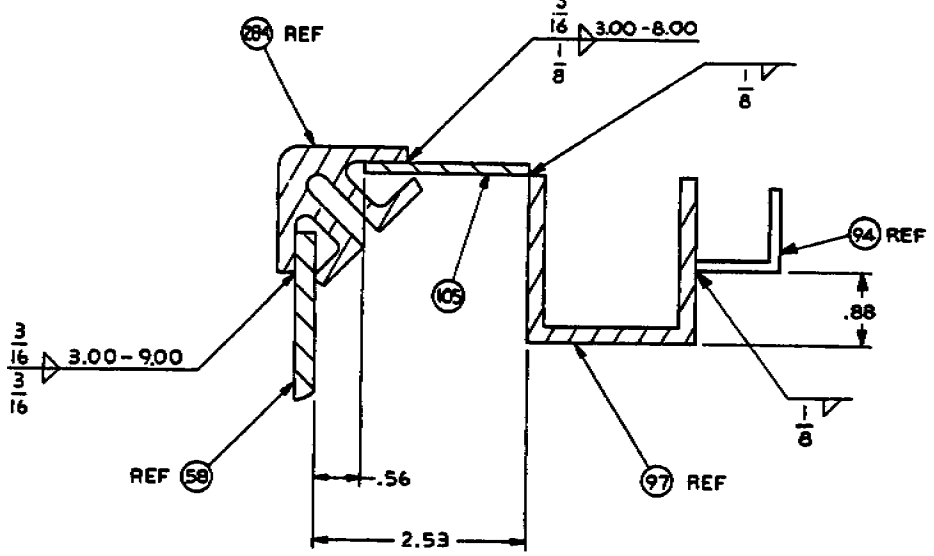

SECTION BB-BB
(SH 5, ZONE C-8)
SCALE 1/1

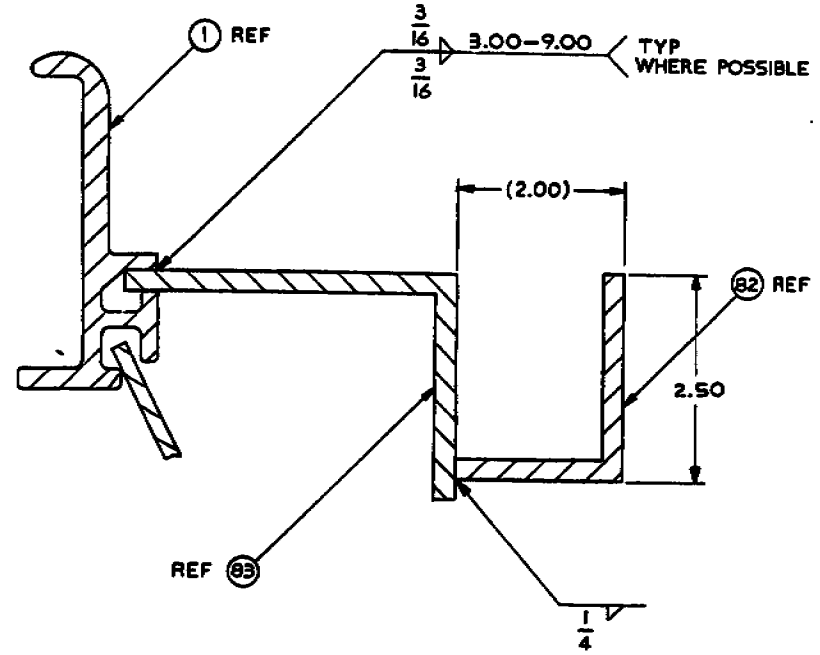

SECTION BC-BC
(SH 5, ZONE C-7)
SCALE 1/1
ROTATED 90° CCW

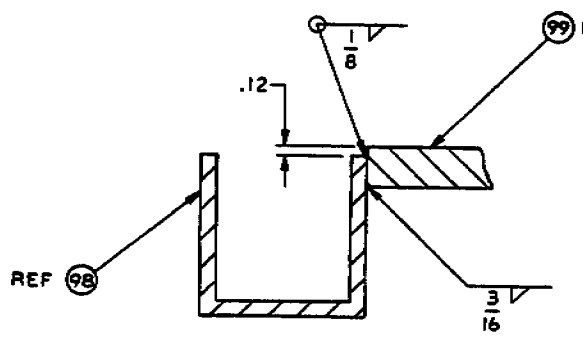

SECTION BD-BD
(SH 5, ZONE C-7)
SCALE 1/1
ROTATED 90° CCW

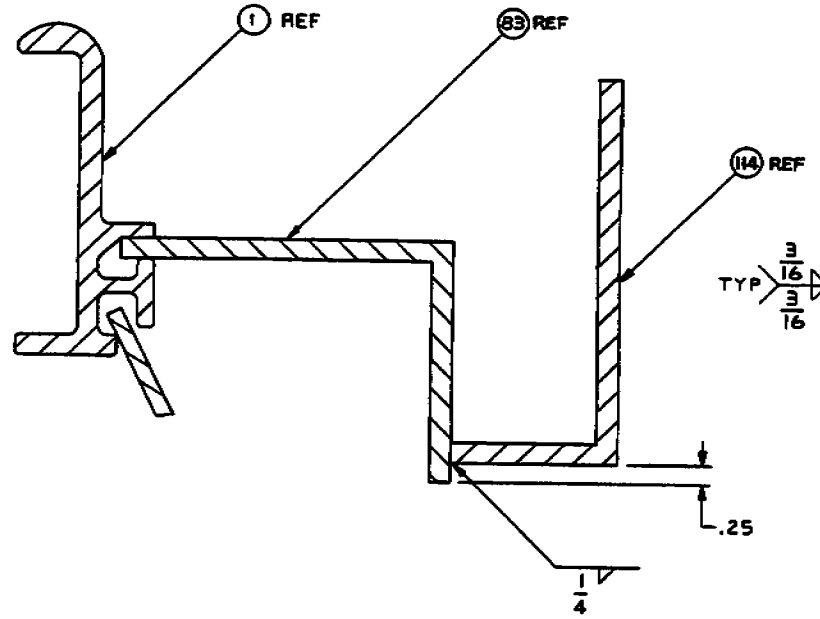

SECTION BE-BE
(SH 5, ZONE C-5)
SCALE 1/1
ROTATED 90° CCW

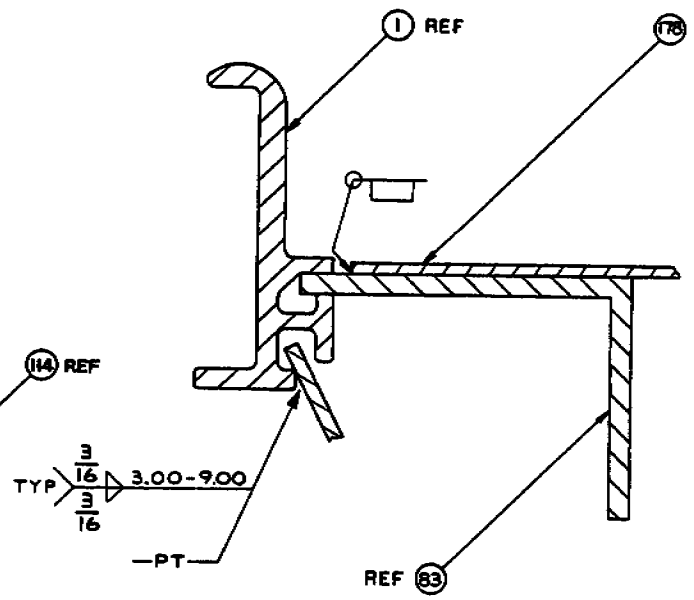

SECTION BF-BF
(SH 5, ZONE C-3)
SCALE 1/1
ROTATED 101° CCW

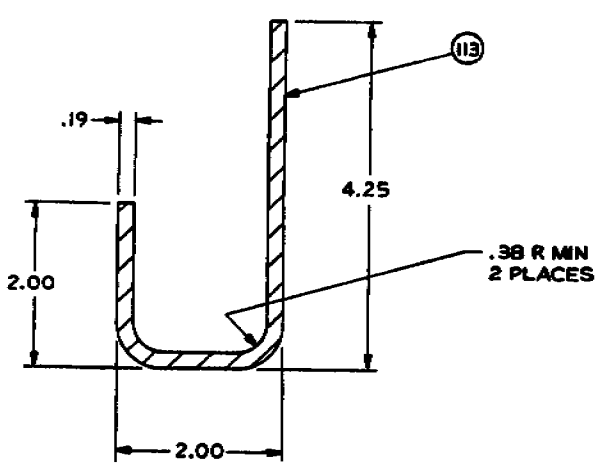

SECTION BG-BG
(SH 5, ZONE B-6)
SCALE 1/1

UNLESS OTHERWISE SPECIFIED DIM/TOLERANCES ARE: SEE ... IN.
ONE PLACE (.X) ±
TWO PLACE (.XX) ±
THREE PLACE (.XXX) ±
ANGLES ±
THIRD ANGLE PROJECTION

DO NOT SCALE THIS DRAWING
FOR INTERPRETATION OF DRAWING DOD-STD-100 APPLIES
REMOVE BURRS AND BREAK SHARP EDGES
SHARP EDGES TO
FILLET RADII TO
MATERIAL

DRAWN BY JEF
DATE 8 DEC 83
CHECKED BY
CONTRACT NO
DRAWING APPROVED
DATE
APPROVED FOR PROCUREMENT
DATE

U.S. ARMY MOBILITY EQUIPMENT
RESEARCH AND DEVELOPMENT COMMAND
FORT BELVOIR, VIRGINIA 22060

HULL STRUCTURE, USCSB MK 2

SIZE	FSCM	DWG NO.
A1	97403	13226E0449

SCALE
SHEET 24

REVISIONS				
ZONE	LTR	DESCRIPTION	DATE	APPROVED
	A	SEE ECP NO. 84HE0841	12 JUL 85	RJL
	B	SEE ECP NO. 84CE1204R1	10 OCT 85	RJL
	C	SEE ECP NO. 85CE1382	1 Apr 86	RAB
	D	SEE ECP NO. 85CE0732R2	25 Sep 86	RAB
	E	SEE ECP NO. 86CE3466	[illegible]	RAB
	F	SEE ECP NO. 87CE0591	30 AUG 87	RAB

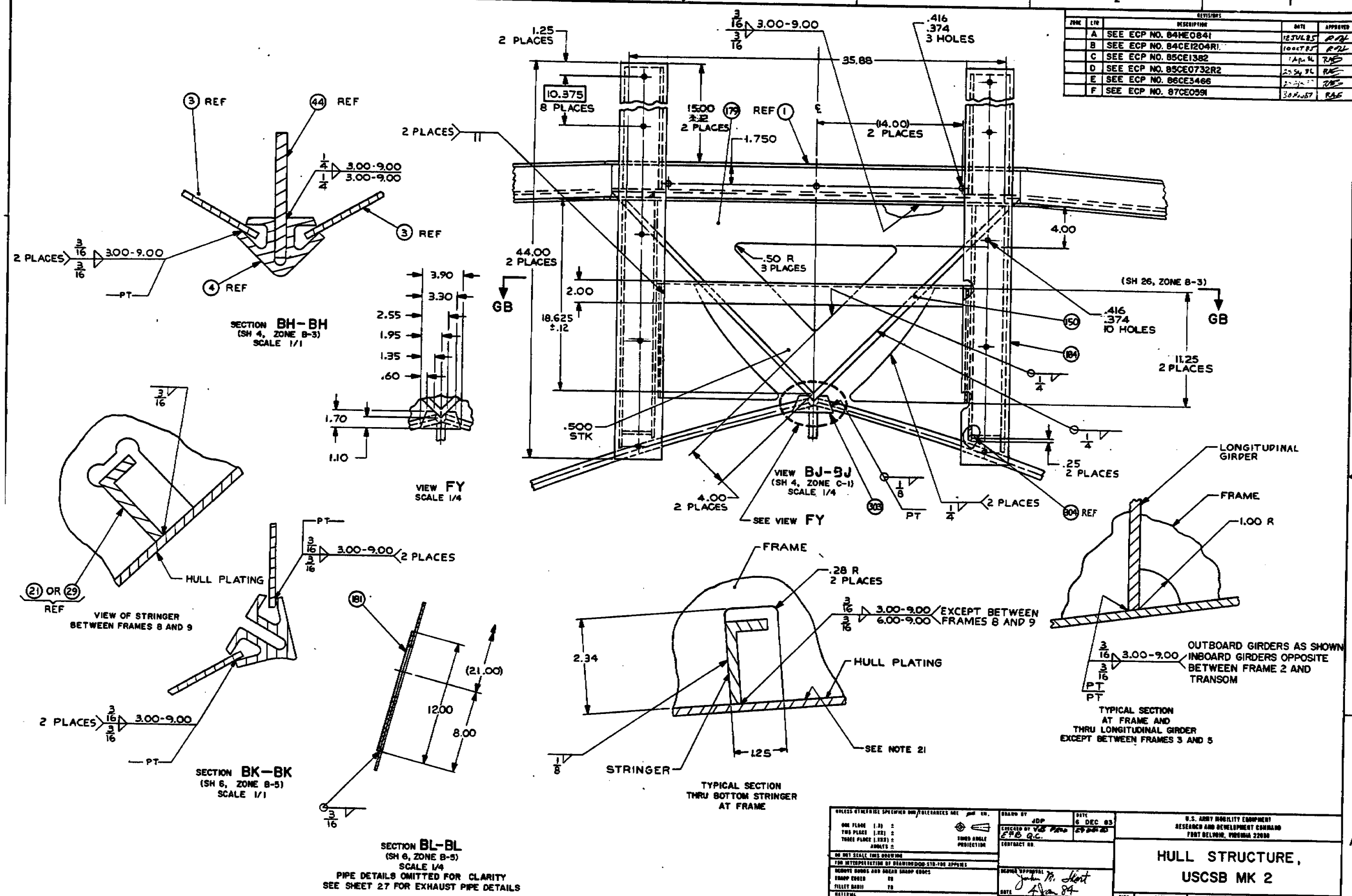

UNLESS OTHERWISE SPECIFIED DIM/TOLERANCES ARE per sh. ONE PLACE (.X) ± TWO PLACES (.XX) ± THREE PLACES (.XXX) ± ANGLES ± THIRD ANGLE PROJECTION	DRAWN BY JDP	DATE 6 DEC 83
DO NOT SCALE THIS DRAWING FOR INTERPRETATION OF DRAWING DOD-STD-100 APPLIES	EXECUTED BY VE Pero EPB G.C.	29 DEC 83
REMOVE BURRS AND BREAK SHARP EDGES	CONTRACT NO.	
SHARP EDGES TO	DESIGN APPROVAL John M. Hart	
FILLET RADII TO	DATE 4 Jan 84	
MATERIAL	APPROVED FOR PROCUREMENT R. E. Wheat	
	DATE 4 JAN 84	

U.S. ARMY MOBILITY EQUIPMENT RESEARCH AND DEVELOPMENT COMMAND
FORT BELVOIR, VIRGINIA 22060

HULL STRUCTURE, USCSB MK 2

SIZE	FSCM	DWG NO.
A1	97403	13226E0449

SCALE | SHEET 25

ZONE	LTR	DESCRIPTION	DATE	APPROVED
	A	SEE ECP NO. 84HE0841	12 JUL 85	RAH
	B	SEE ECP NO. 84CE1204RI	10 OCT 85	RAH
	F	SEE ECP NO. 87CE0591	JUNE 87	RMS

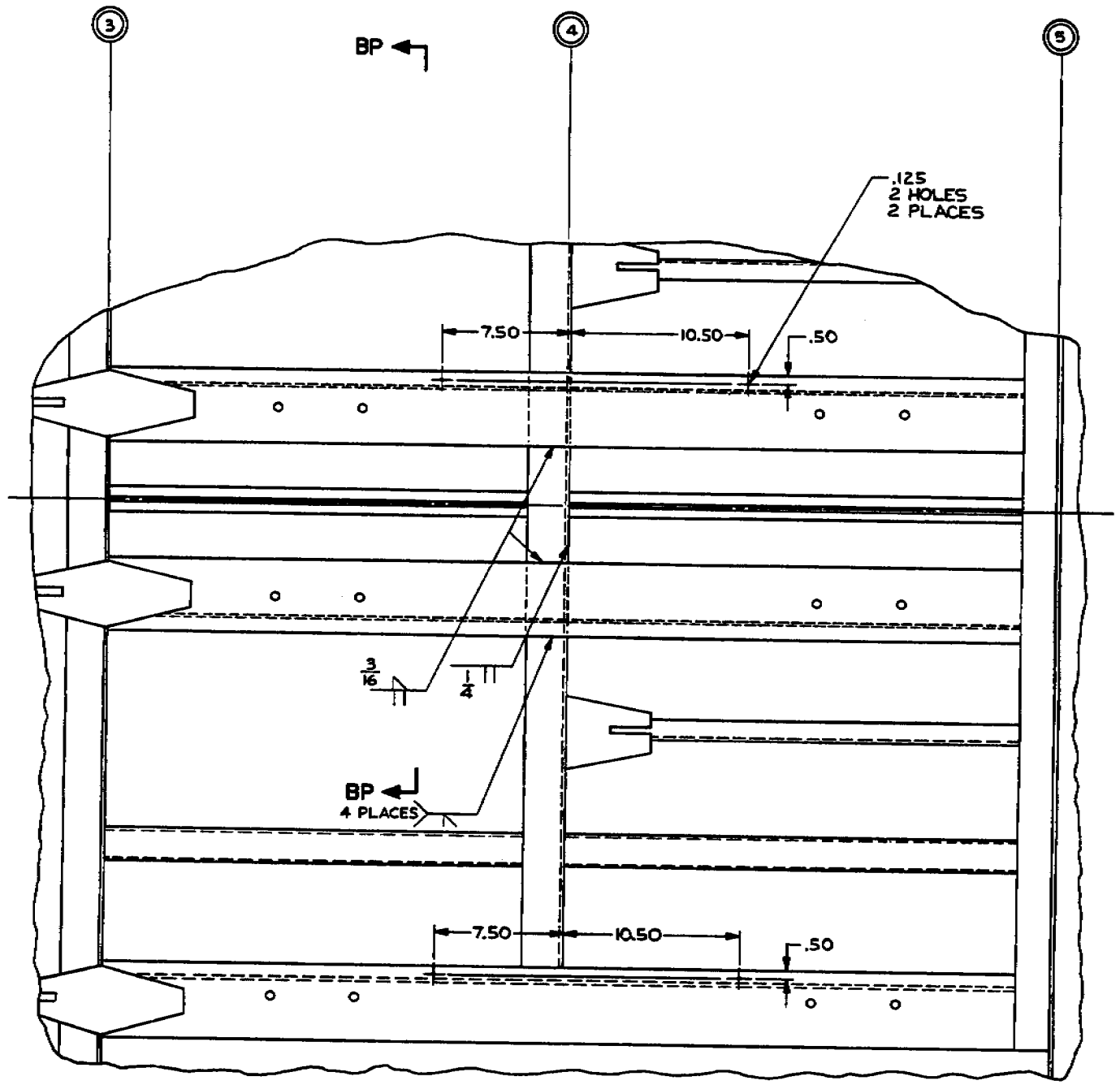

VIEW BN
(SH 5, ZONE B-4)
SCALE 1/4
ITEMS NOT SHOWN
OMITTED FOR CLARITY

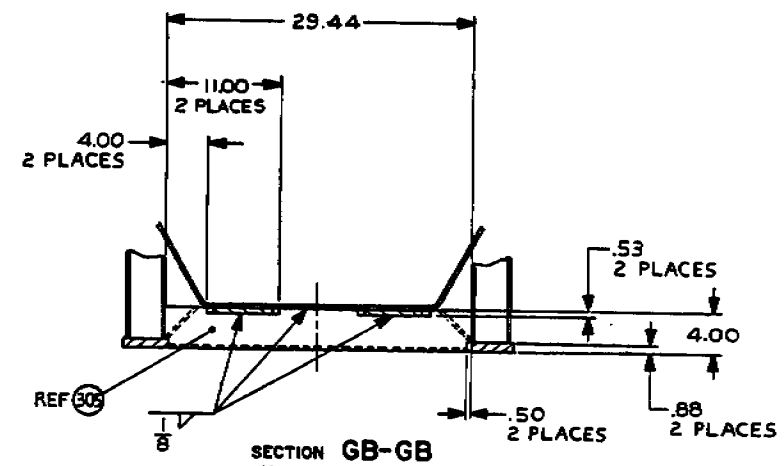

SECTION GB-GB
(SH 25, ZONE C-2)
SCALE 1/8

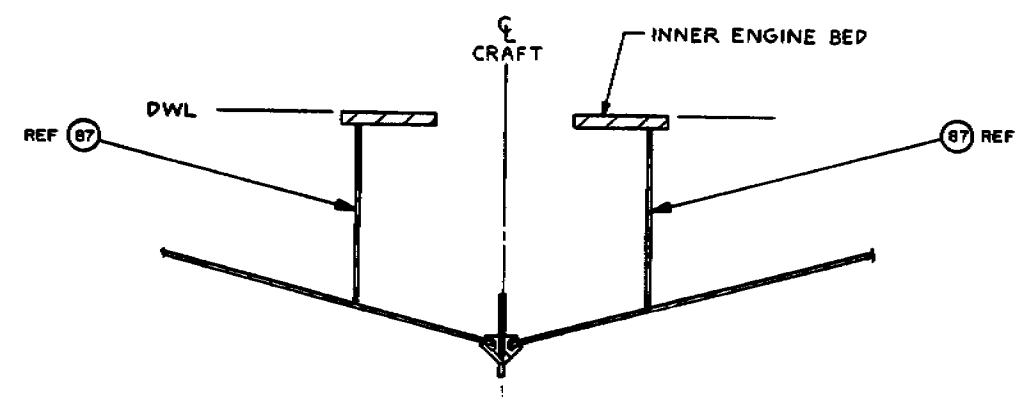

SECTION BP-BP
SCALE 1/4
ROTATED 90° CW

UNLESS OTHERWISE SPECIFIED DIM/TOLERANCES ARE: SEE NL
ONE PLACE (.X) ±
TWO PLACE (.XX) ±
THREE PLACE (.XXX) ±
ANGLES ±
THIRD ANGLE PROJECTION
DO NOT SCALE THIS DRAWING
FOR INTERPRETATION OF DRAWING DOD-STD-100 APPLIES
REMOVE BURRS AND BREAK SHARP EDGES
SHARP EDGES NO
FILLET RADIUS NO
MATERIAL

DRAWN BY RLG
DATE 6 DEC 83
CHECKED BY
CONTRACT NO
DESIGN APPROVAL
DATE 4 Jan 84
APPROVED FOR PROCUREMENT
DATE

U.S. ARMY MOBILITY EQUIPMENT
RESEARCH AND DEVELOPMENT COMMAND
FORT BELVOIR, VIRGINIA 22060

HULL STRUCTURE, USCSB MK 2

SIZE	FSCM	DWG NO
A1	97403	13226E0449

SCALE SHEET 26

REVISIONS				
ZONE	LTR	DESCRIPTION	DATE	APPROVED
	C	SEE ECP NO. 85CE1382	Apr 86	
	D	SEE ECP NO. 86CE0114R1	22 Sep 86	
	E	SEE ECP NO. 86CE3466	27 Nov 87	
	F	SEE ECP NO. 87CE0591	30 Nov 87	
	J	SEE ECP NO. 88CE3736	6 Oct 88	

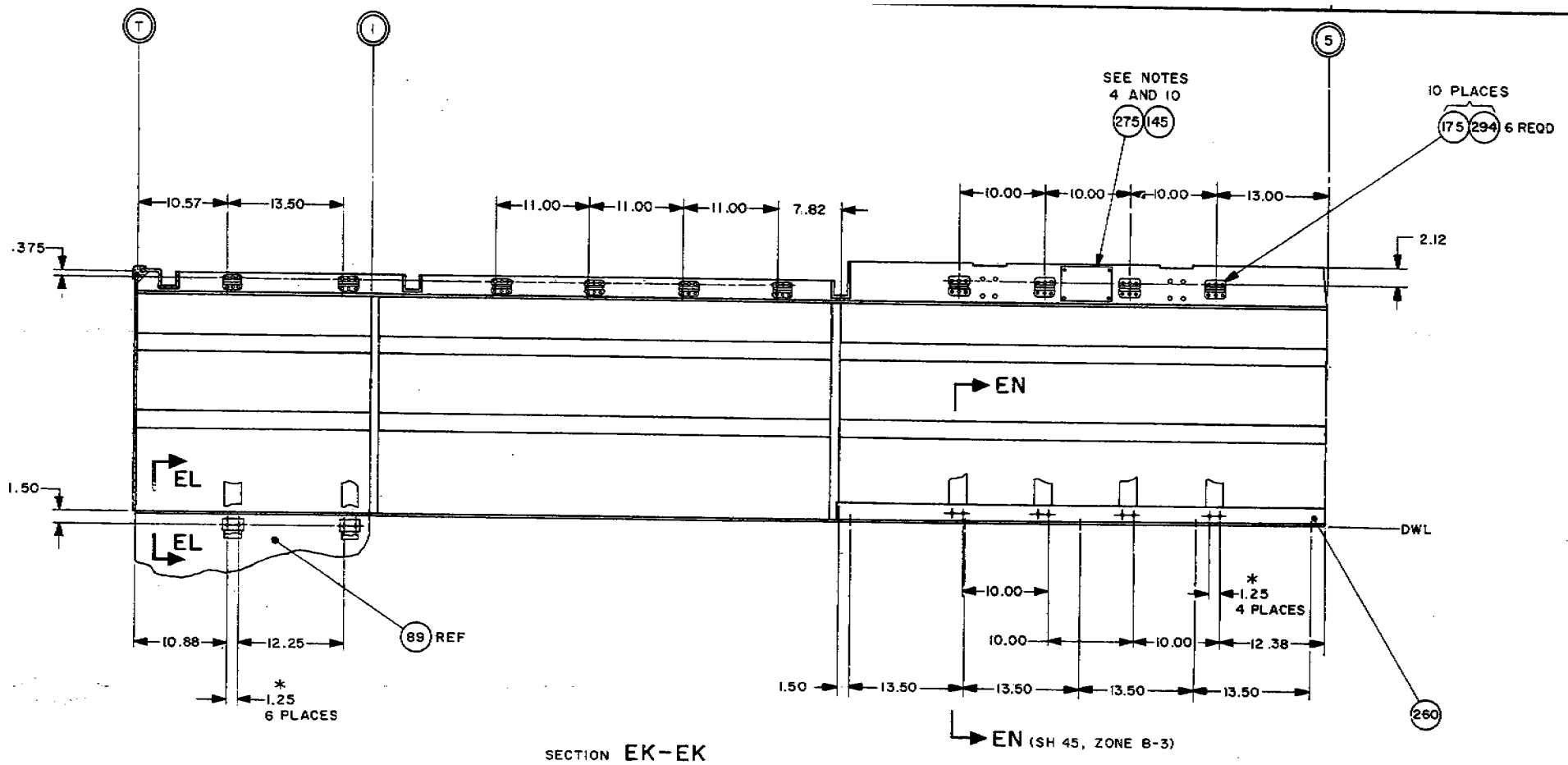

SECTION EK-EK
(SH 44, ZONE C-3)
SCALE 1/8

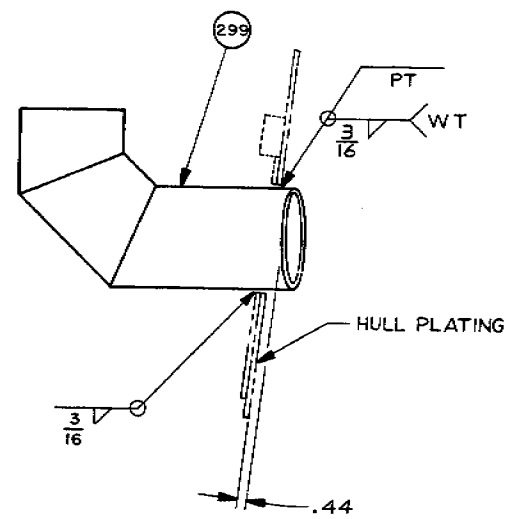

SECTION FU-FU
(SH 6, ZONE B-6)
SCALE 1/4
SEE SECTION FV-FV FOR
PORT EXHAUST

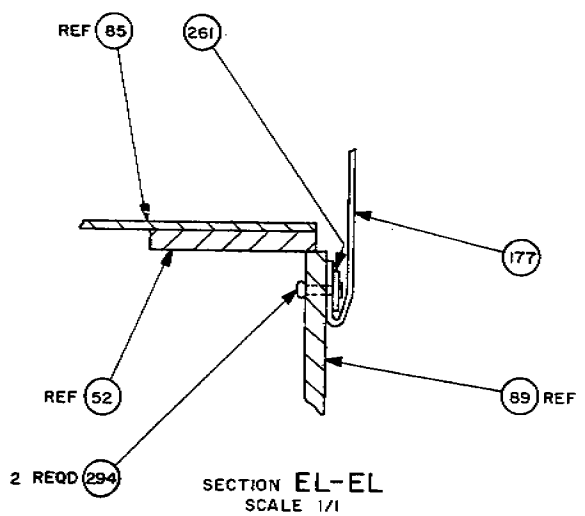

SECTION EL-EL
SCALE 1/1

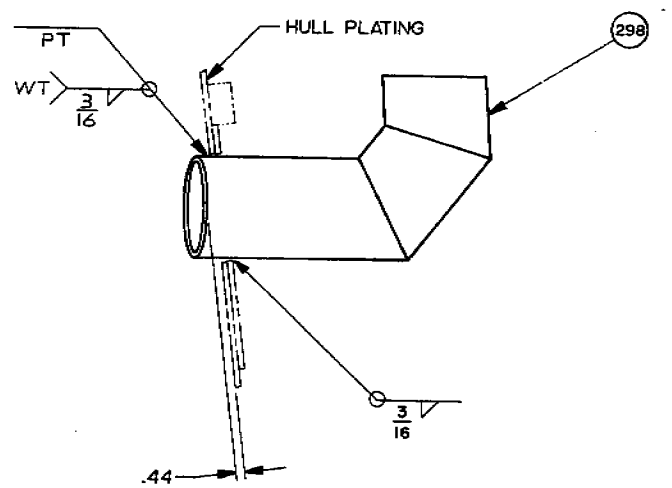

SECTION FV-FV
SCALE 1/4
FOR PIPE LOCATION, REFER TO
SECTION BL-BL
(SH 25, ZONE A-6)

UNLESS OTHERWISE SPECIFIED DIM/TOLERANCES ARE: per IPL
ONE PLACE (.X) ±
TWO PLACE (.XX) ±
THREE PLACE (.XXX) ±
ANGLES ±
THIRD ANGLE PROJECTION
DO NOT SCALE THIS DRAWING
FOR INTERPRETATION OF DRAWING DOD-STD-100 APPLIES
REMOVE BURRS AND BREAK SHARP EDGES
SHARP EDGES TO
FILLET RADII TO
MATERIAL

DRAWN BY EW
DATE 8 DEC 83
CHECKED BY VJS FOD 27 DEC 83
EPB Q.C.
CONTRACT NO
DESIGN APPROVAL John M. Short
DATE 4 Jan 84
APPROVED FOR PROCUREMENT R. E. Wild
DATE 14 JAN 84

U.S. ARMY MOBILITY EQUIPMENT
RESEARCH AND DEVELOPMENT COMMAND
FORT BELVOIR, VIRGINIA 22060

HULL STRUCTURE,
USCSB MK 2

SIZE	FSCM	DWG NO.
A1	97403	13226E0449

SCALE
SHEET 27

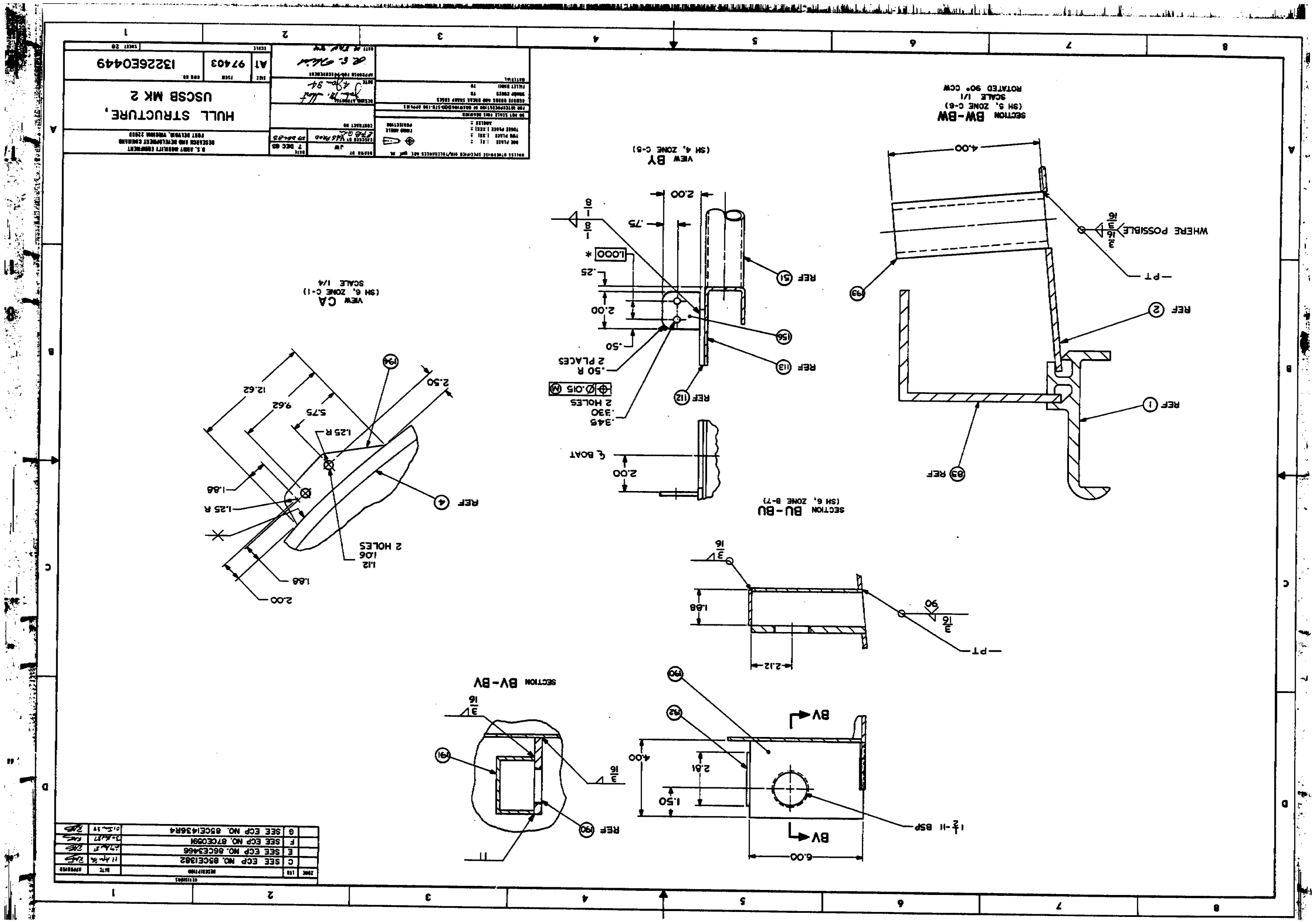

ZONE	LTR	DESCRIPTION	DATE	APPROVED
		REVISIONS		
	C	SEE ECP NO. 85CE1382	11 Apr 86	
	E	SEE ECP NO. 86CE3466	27 Apr 87	
	F	SEE ECP NO. 87CE0991	27 Apr 87	
	G	SEE ECP NO. 85CE1436R4	01 Jun 89	

U.S. ARMY MOBILITY EQUIPMENT
RESEARCH AND DEVELOPMENT COMMAND
FORT BELVOIR, VIRGINIA 22060

HULL STRUCTURE, USCSB MK 2

SIZE	CODE	DWG NO.
A1	97403	13226E0449

SCALE | SHEET 20

ZONE	LTR	DESCRIPTION	DATE	APPROVED
	C	SEE ECP NO. 85CE1382	11 Apr 86	
	D	SEE ECP NO. 85CE0732 R2 AND 86CE0503	26 Sep 86	
	E	SEE ECP NO. 86CE3466	29 Apr 87	
	F	SEE ECP NO. 87CE0559	30 Nov 87	
	H	SEE ECP NO. 88CE0380	06 Sep 88	

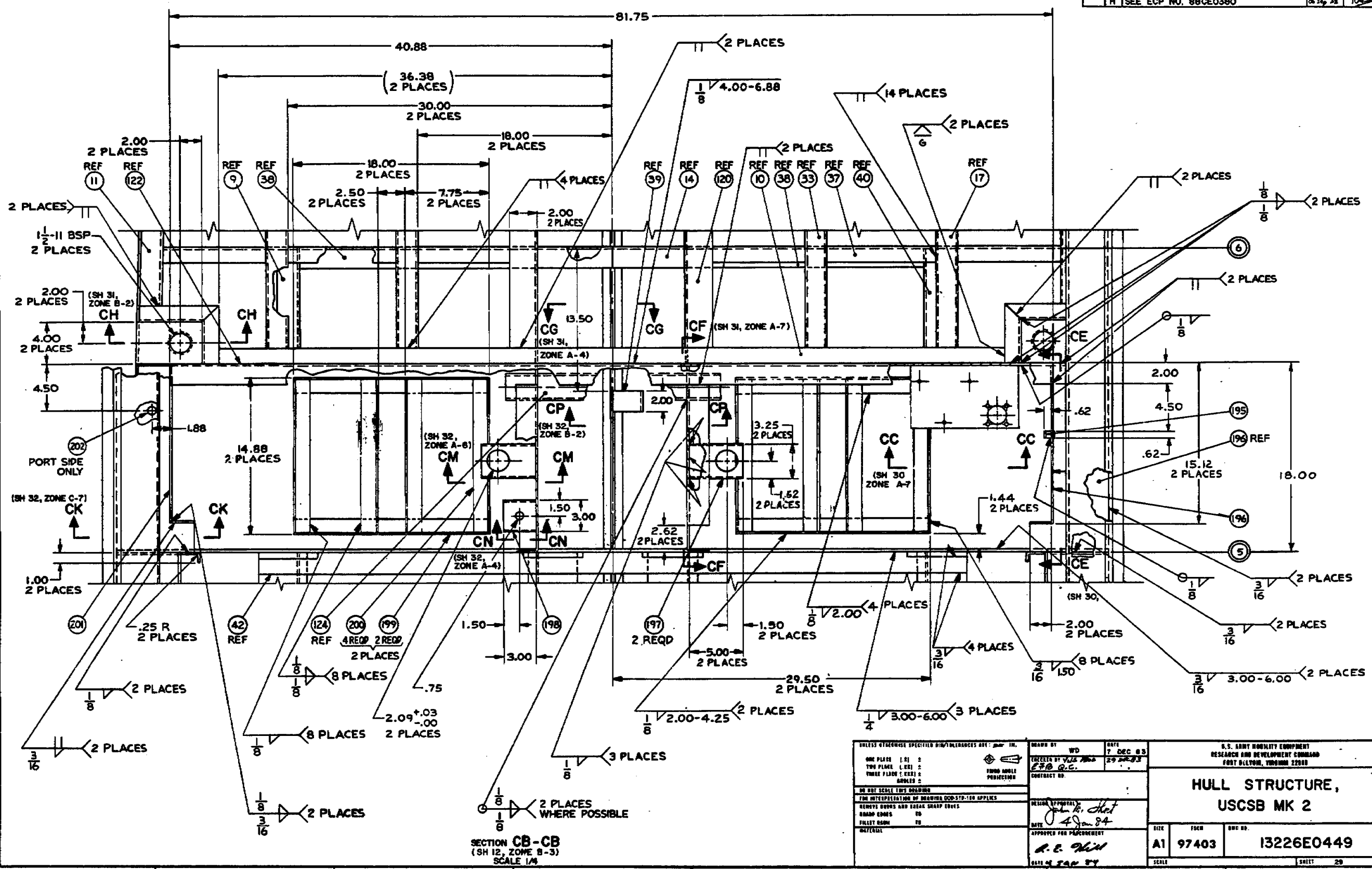

UNLESS OTHERWISE SPECIFIED DIM/TOLERANCES ARE: per IN.
ONE PLACE (.0) ±
TWO PLACE (.00) ±
THREE PLACE (.000) ±
ANGLES ±
THIRD ANGLE PROJECTION

DO NOT SCALE THIS DRAWING
FOR INTERPRETATION OF DRAWING DCD-STD-100 APPLIES
REMOVE BURRS AND BREAK SHARP EDGES
BROAD EDGES TO
FILLET RADII TO
MATERIAL

DRAWN BY WD DATE 7 DEC 83
TRACED BY Y.L.S. Mills DATE 29 DEC 83
ETB Q.C.
CONTRACT NO.
DESIGN APPROVAL John W. Shed DATE 4 Jan 84
APPROVED FOR PURCHASEMENT R. E. Wild DATE 4 JAN 84

U.S. ARMY MOBILITY EQUIPMENT RESEARCH AND DEVELOPMENT COMMAND FORT BELVOIR, VIRGINIA 22060

HULL STRUCTURE, USCSB MK 2

SIZE	FSCM	DWG NO.
A1	97403	13226E0449

SCALE SHEET 29

ZONE	LTR	DESCRIPTION	DATE	APPROVED
	A	SEE ECP NO. 84HE0641	18 Feb 85	[illegible]
	C	SEE ECP NO. 85CE1382	11 Apr 86	RAB
	D	SEE ECP NO. 85CE0732R2 ✓ AND 86CE0107	25 Sep 86	RAB
	E	SEE ECP NO. 86CE3466	29 Apr 97	RAB
	F	SEE ECP NO. 87CE0591	30 Nov 87	RAB

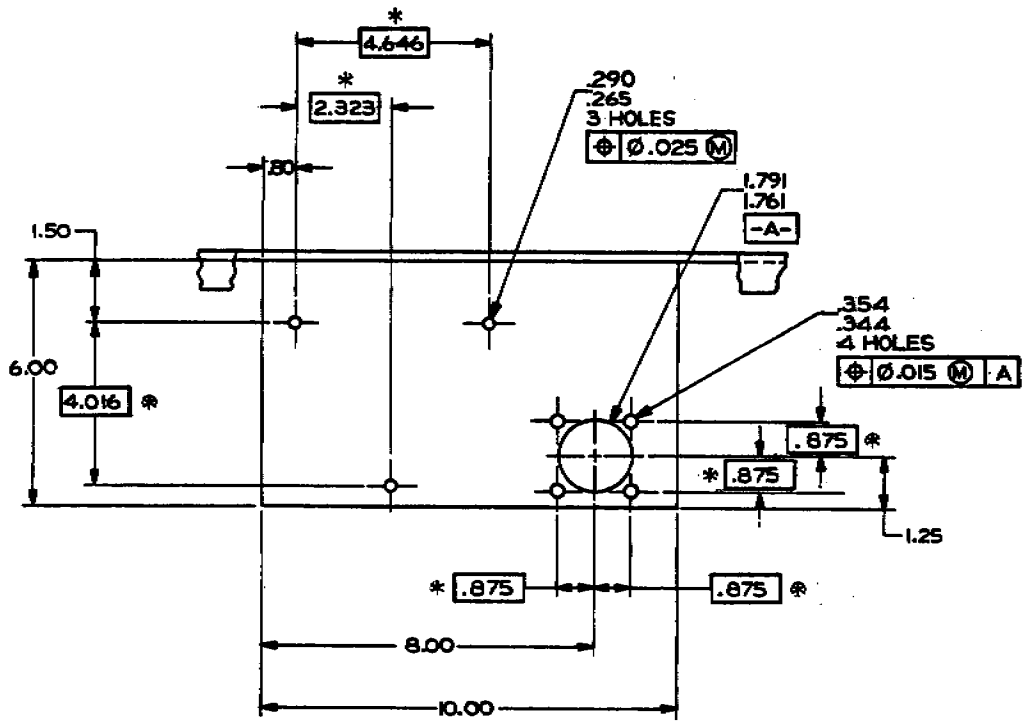

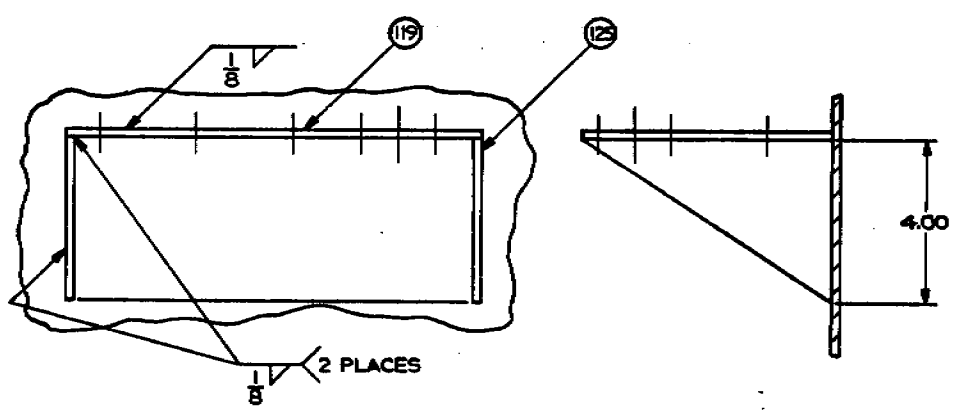

VIEW CC-CC
(SH 29, ZONE B-3)
SCALE 6" = 1'-0"

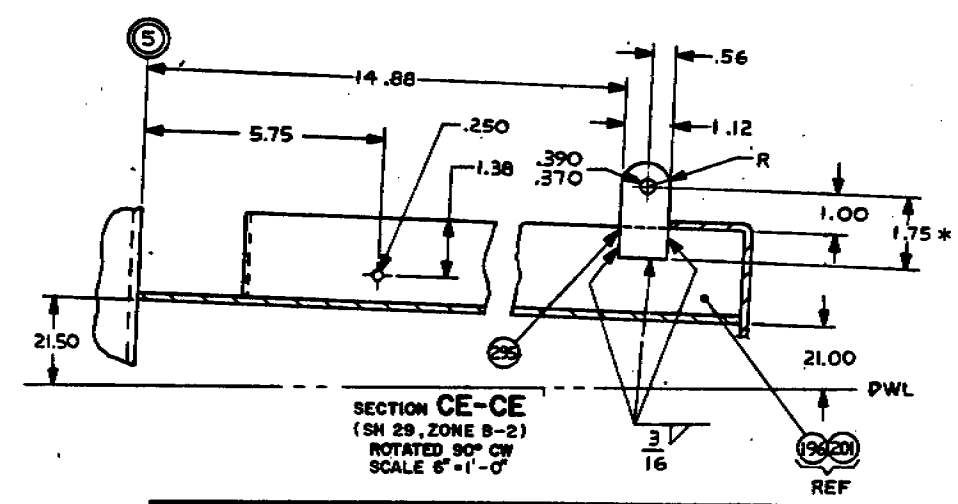

SECTION CE-CE
(SH 29, ZONE B-2)
ROTATED 90° CW
SCALE 6" = 1'-0"

UNLESS OTHERWISE SPECIFIED DIM/TOLERANCES SEE ... MIL.
ONE PLACE (.X) ±
TWO PLACE (.XX) ±
THREE PLACE (.XXX) ±
ANGLES ±
THIRD ANGLE PROJECTION
DO NOT SCALE THIS DRAWING
FOR INTERPRETATION OF DRAWING DOD-STD-100 APPLIES
REMOVE BURRS AND BREAK SHARP EDGES
SHARP EDGES TO
FILLET RADII TO
MATERIAL

DRAWN BY TRR
DATE 7 DEC. 83
CHECKED BY [illegible] ETB Q.C.
CONTRACT NO.
DESIGN APPROVAL [illegible]
DATE 4 Jan 84
APPROVED FOR PROCUREMENT [illegible]
DATE [illegible]

U.S. ARMY MOBILITY EQUIPMENT
RESEARCH AND DEVELOPMENT COMMAND
FORT BELVOIR, VIRGINIA 22060

HULL STRUCTURE, USCSB MK 2

SIZE	FSCM	DWG NO.
A1	97403	13226E0449

SCALE
SHEET 30

ZONE	LTR	REVISIONS DESCRIPTION	DATE	APPROVED
	C	SEE ECP NO. 85CE1382	11 Apr 86	[illegible]
	D	SEE ECP NO. 85CE1027R2	25 Sep 86	[illegible]
	E	SEE ECP NO. 86CE3486	29 Nov 87	[illegible]
	F	SEE ECP NO. 87CE0591	30 Nov 87	[illegible]
	G	SEE ECP NO. 85CE1223R3	21 Jan 88	[illegible]

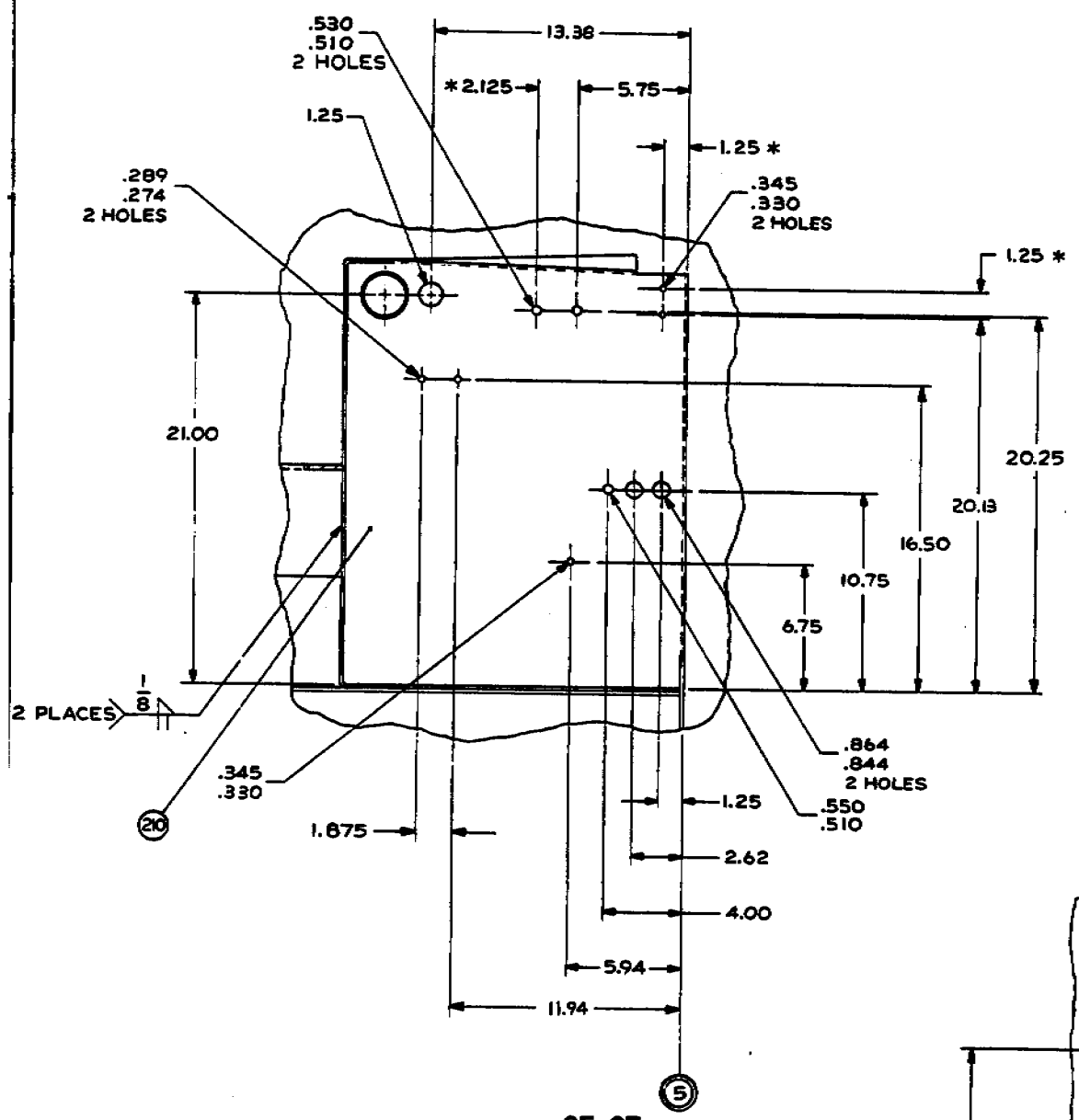

SECTION CF-CF
(SH 29, ZONE C-4)
SCALE 1/4
ROTATED 90° CCW

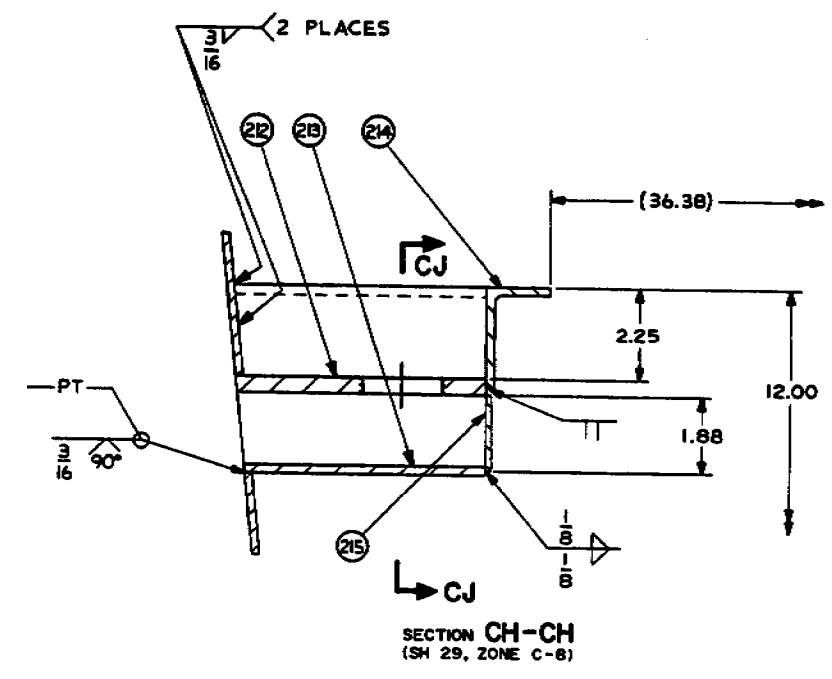

SECTION CH-CH
(SH 29, ZONE C-8)

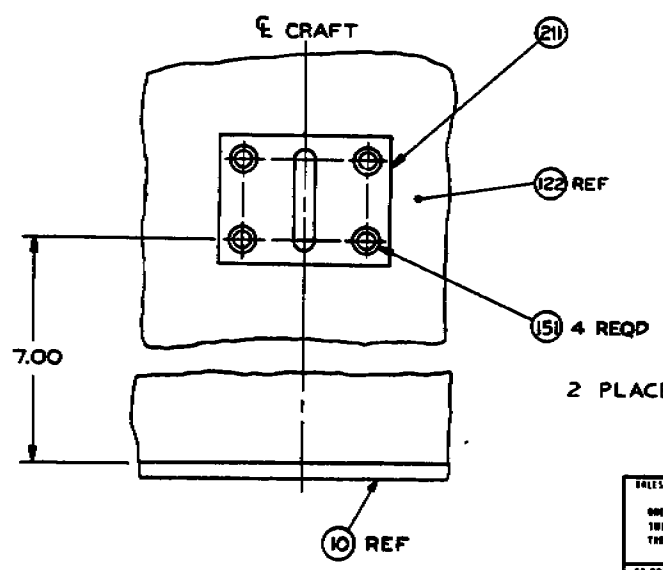

VIEW CG-CG
(SH 29, ZONE C-5)
SCALE 1/1

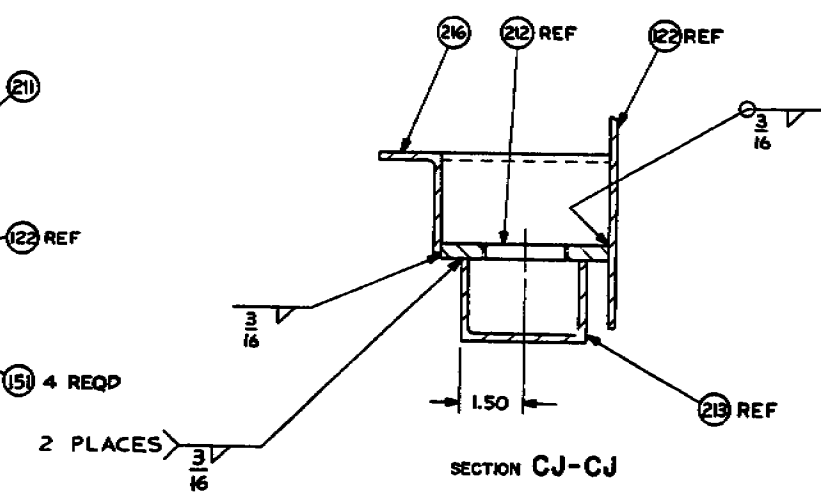

SECTION CJ-CJ

UNLESS OTHERWISE SPECIFIED DIM/TOLERANCES ARE SEE DWG		DRAWN BY DTH	DATE 7 DEC 83
ONE PLACE (.X) ±		CHECKED BY [illegible]	29 DEC 83
TWO PLACE (.XX) ±	THIRD ANGLE PROJECTION	CONTRACT NO	
THREE PLACE (.XXX) ±			
ANGLES ±			
DO NOT SCALE THIS DRAWING		DESIGN APPROVAL [illegible]	
FOR INTERPRETATION OF DRAWING DOD-STD-100 APPLIES		DATE 4 Jan 84	
REMOVE BURRS AND BREAK SHARP EDGES		APPROVED FOR PROCUREMENT [illegible]	
SHARP EDGES TO		DATE 4 JAN 84	
FINISH DRAW TO			
MATERIAL			

U.S. ARMY MOBILITY EQUIPMENT
RESEARCH AND DEVELOPMENT COMMAND
FORT BELVOIR, VIRGINIA 22060

HULL STRUCTURE,
USCSB MK 2

SIZE	FSCM	DWG NO
A1	97403	13226E0449

SCALE | SHEET 31

REVISIONS				
ZONE	LTR	DESCRIPTION	DATE	APPROVED
	C	SEE ECP NO. 85CE1382	11 Apr 86	[illegible]
	D	SEE ECP NO. 85CE0732R2	23 [illegible]	[illegible]
	E	SEE ECP NO. 86CE3466	30 August	[illegible]

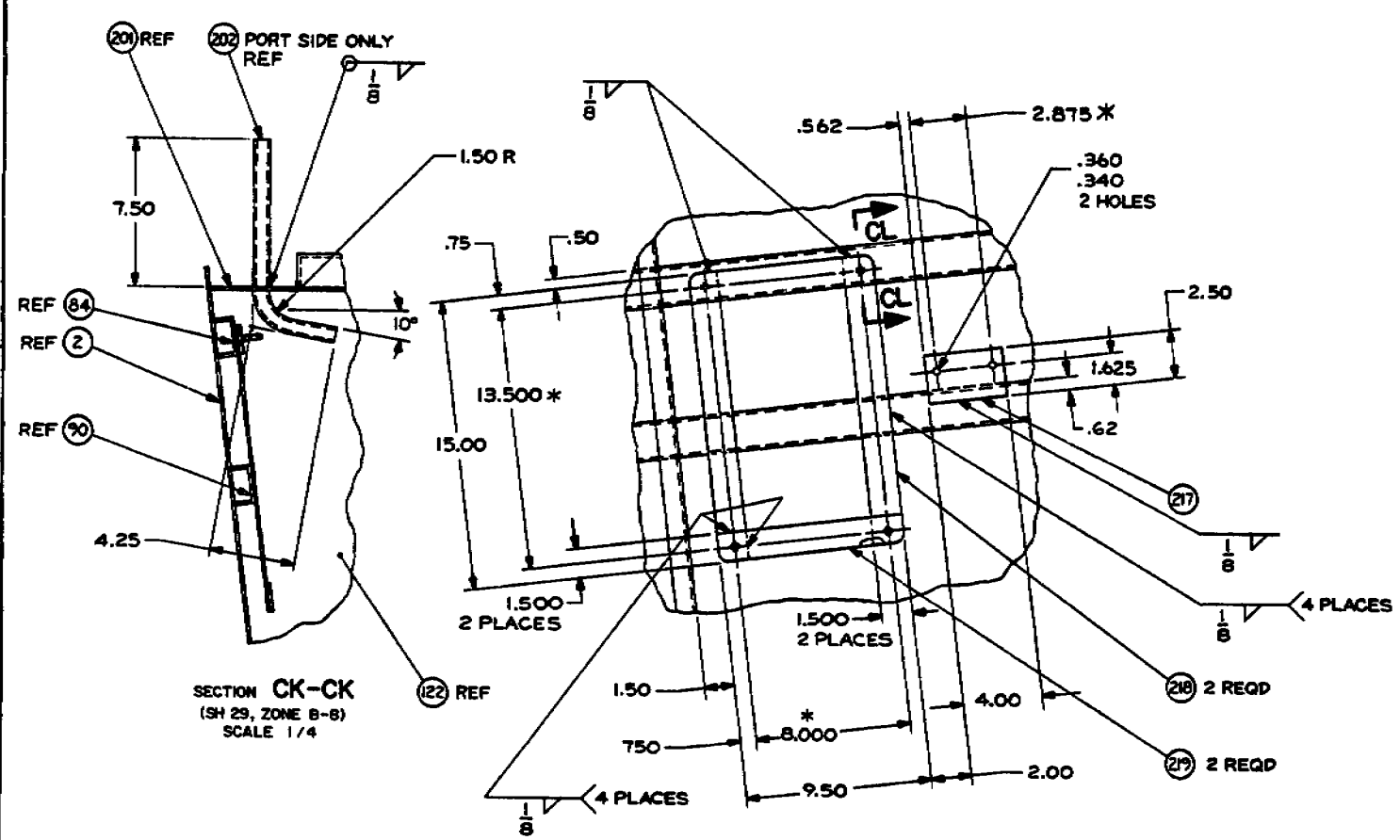

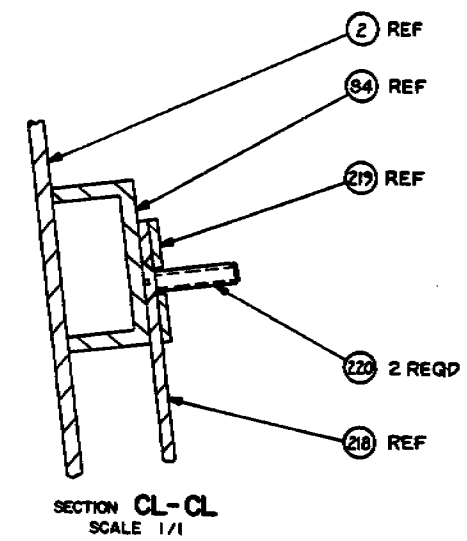

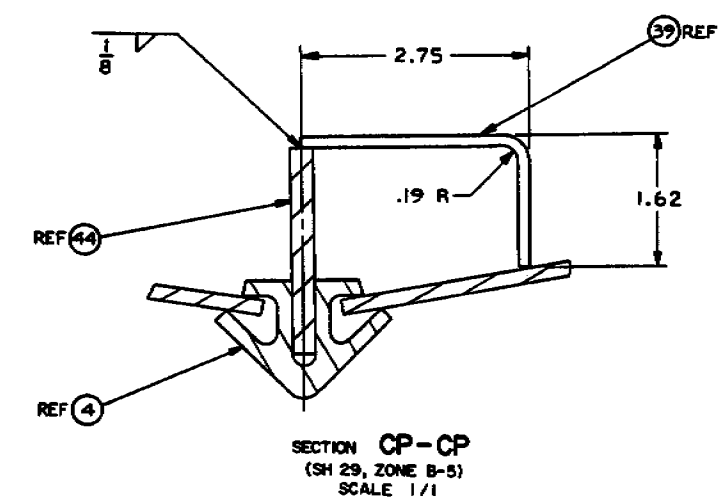

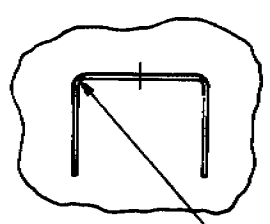

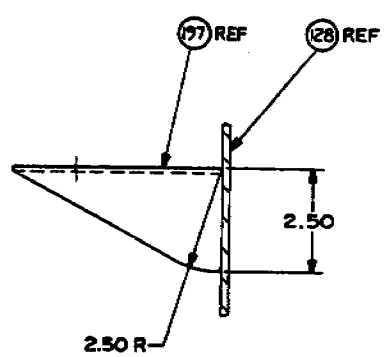

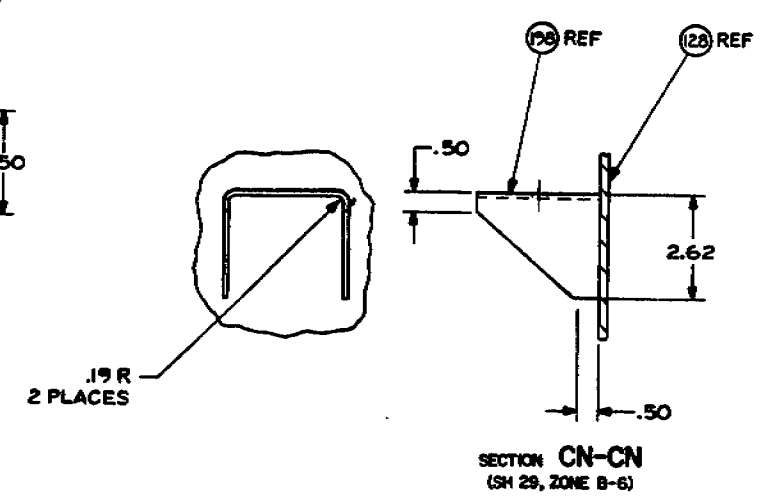

UNLESS OTHERWISE SPECIFIED DIM/TOLERANCES ARE per VRL
ONE PLACE (.X) ±
TWO PLACE (.XX) ±
THREE PLACE (.XXX) ±
ANGLES ±
THIRD ANGLE PROJECTION
DO NOT SCALE THIS DRAWING
FOR INTERPRETATION OF DRAWING DOD STD 100 APPLIES
REMOVE BURRS AND BREAK SHARP EDGES
SHARP EDGES .20
FILLET RADIUS .20
MATERIAL

DRAWN BY TMC
DATE 7 DEC 83
CHECKED BY [illegible] 19 Dec 83
ENG Q.C.
CONTRACT NO
DESIGN APPROVAL John M. Hart
DATE 4 Jan 84
APPROVED FOR PROCUREMENT R.E. Wind
DATE 4 Jan 84

U.S. ARMY MOBILITY EQUIPMENT
RESEARCH AND DEVELOPMENT COMMAND
FORT BELVOIR, VIRGINIA 22060

HULL STRUCTURE, USCSB MK 2

SIZE	FSCM	DWG NO
A1	97403	13226E0449

SCALE
SHEET 32

REVISIONS				
ZONE	LTR	DESCRIPTION	DATE	APPROVED
	A	SEE ECP NO. 84HE0841	12 JUL 85	
	C	SEE ECP NO. 85CE1382	11 APR 86	

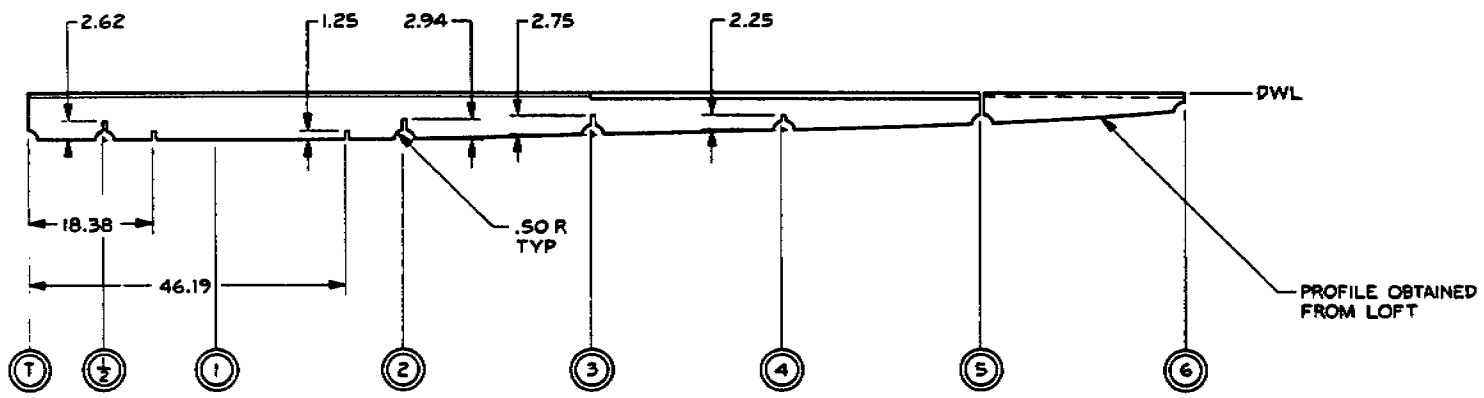

PROFILE OF PORT OUTBOARD GIRDER DEVELOPMENT

SCALE 1"=1'-0"

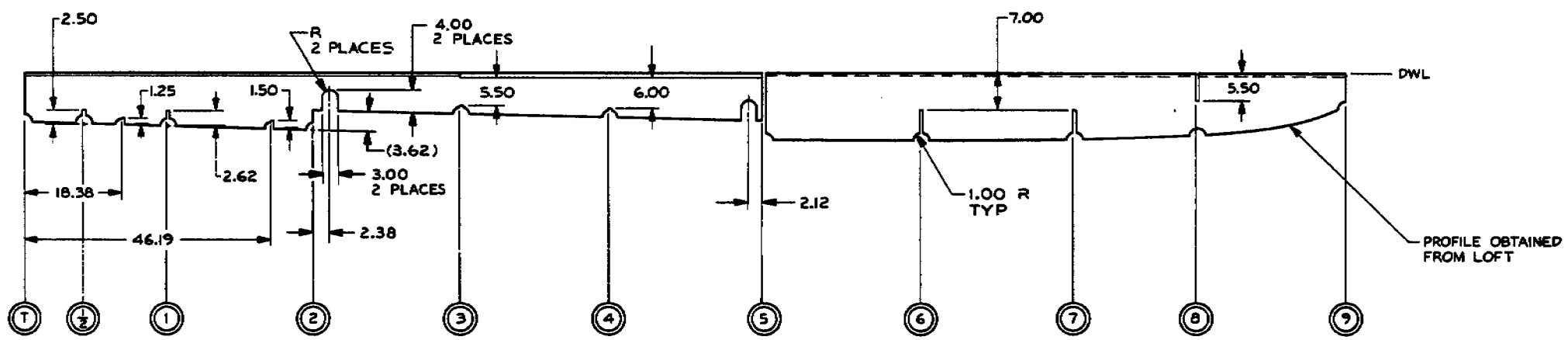

PROFILE OF PORT INBOARD GIRDER DEVELOPMENT

SCALE 1"=1'-0"

NOTE:

SLOTS ARE CUT TO ACCOMODATE CROSS LAP JOINTS AT INTERSECTIONS OF FRAMES AND GIRDERS. FRAMES SHALL BE SLOTTED TO SUIT.

UNLESS OTHERWISE SPECIFIED DIM/TOLERANCES ARE — IN.
ONE PLACE (.X) ±
TWO PLACE (.XX) ±
THREE PLACE (.XXX) ±
ANGLES ±
PROJ ANGLE PROJECTION
DO NOT SCALE THIS DRAWING
FOR INTERPRETATION OF DRAWING DOD-STD-100 APPLIES
REMOVE BURRS AND BREAK SHARP EDGES
SHARP EDGES 10
FILLET RADII 10
MATERIAL

DRAWN BY THC
DATE 7 DEC 83
CHECKED BY VJS for a EPB U.C.
DATE 29 Dec 83
CONTRACT NO
DESIGN APPROVAL John M. Short
DATE 4 Jan 84
APPROVED FOR PROCUREMENT A. S. Thiel
DATE 4 JAN 84

U.S. ARMY MOBILITY EQUIPMENT RESEARCH AND DEVELOPMENT COMMAND
FORT BELVOIR, VIRGINIA 22060

HULL STRUCTURE, USCSB MK 2

SIZE	FSCM	DWG NO
A1	97403	13226E0449

SCALE SHEET 33

ZONE	LTR	REVISIONS DESCRIPTION	DATE	APPROVED
	C	SEE ECP NO. 85CE1382	[illegible]	[illegible]
	E	SEE ECP NO. 86CE3466	[illegible]	[illegible]
	F	SEE ECP NO. 87CE0591	[illegible]	[illegible]
	G	SEE ECP NO. 85CV1502R5	01 Jan 88	[illegible]

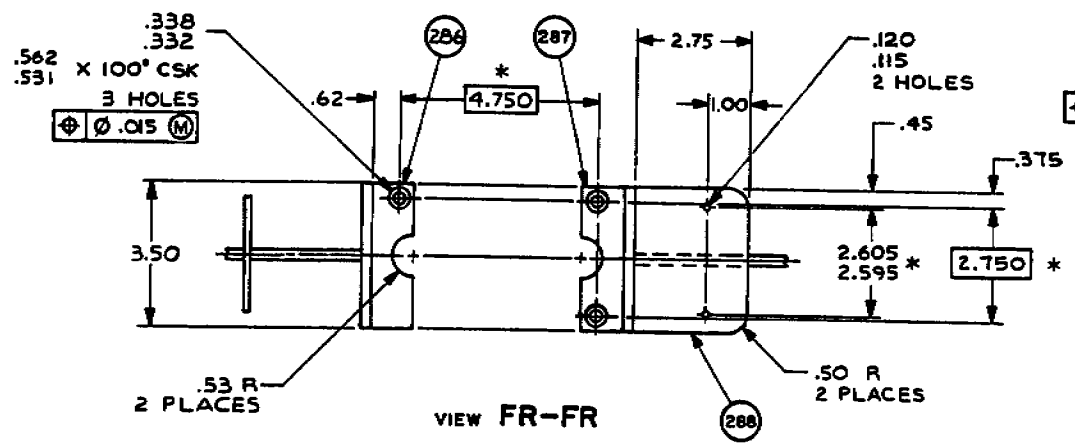

VIEW FR-FR

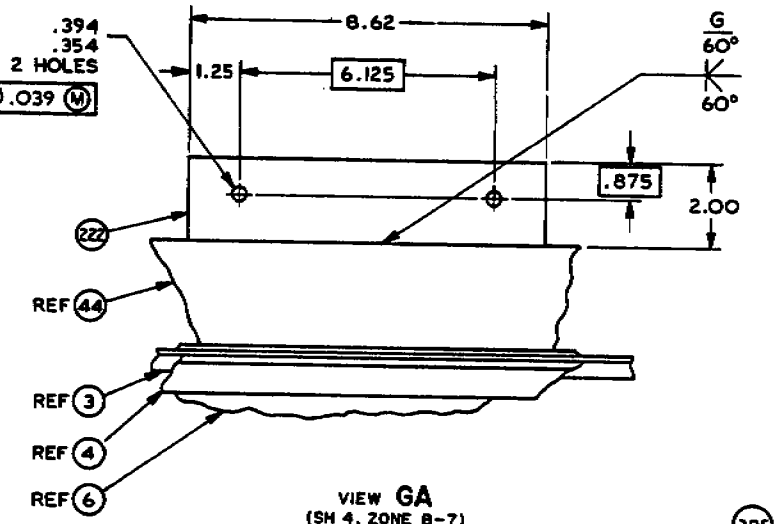

VIEW GA
(SH 4, ZONE B-7)
SCALE 1/2

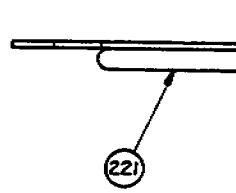

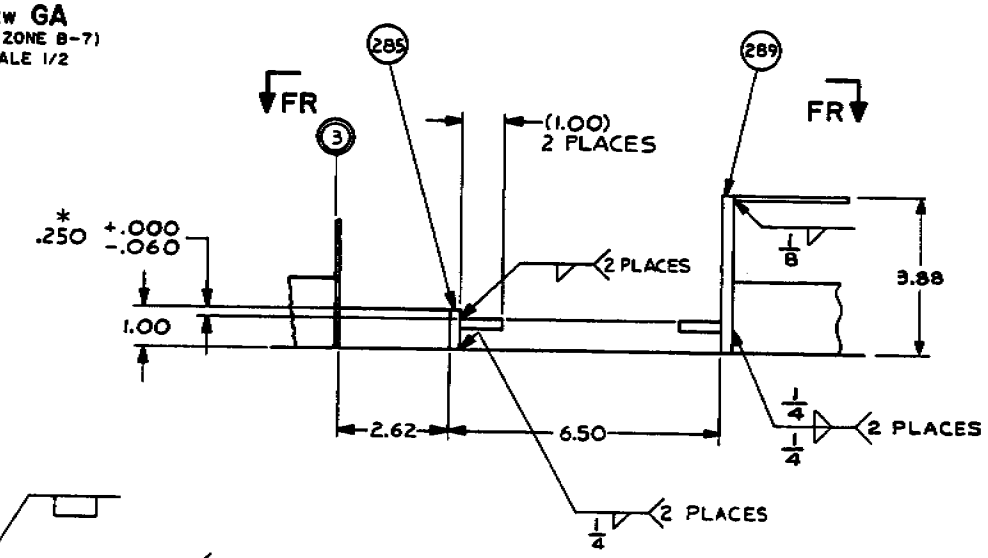

VIEW CU
(SH 4, ZONE B-6)

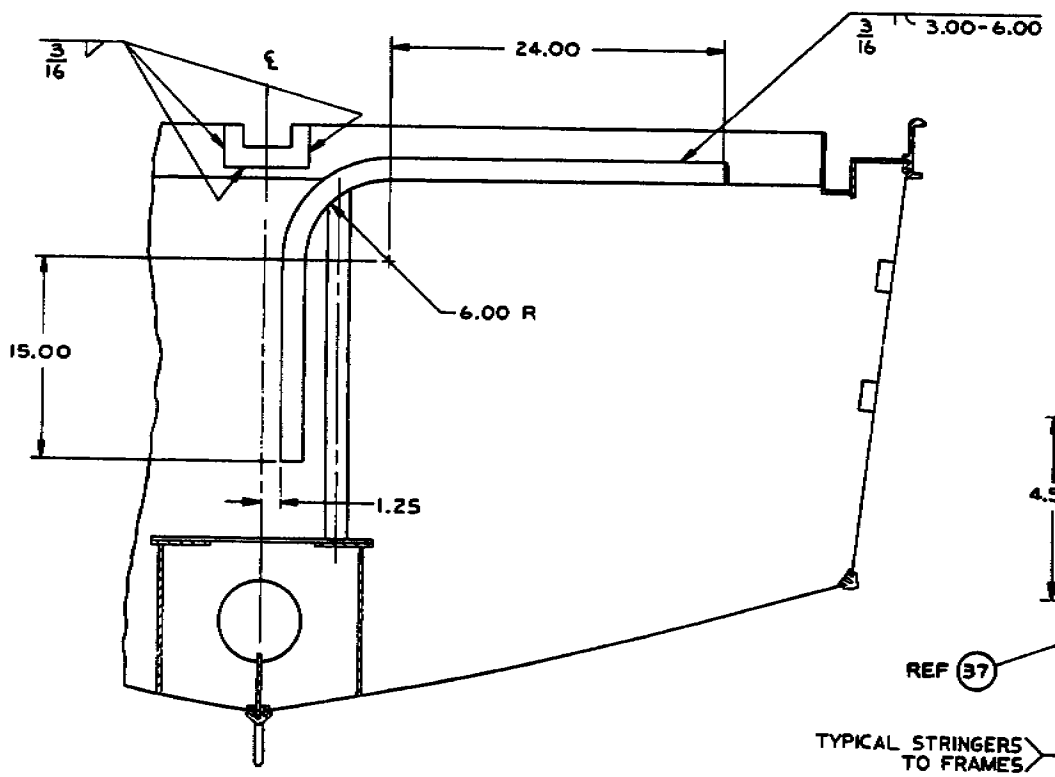

SECTION CR-CR
(SH 5, ZONE C-6)
SCALE 2"=1'-0"
ROTATED 90° CW

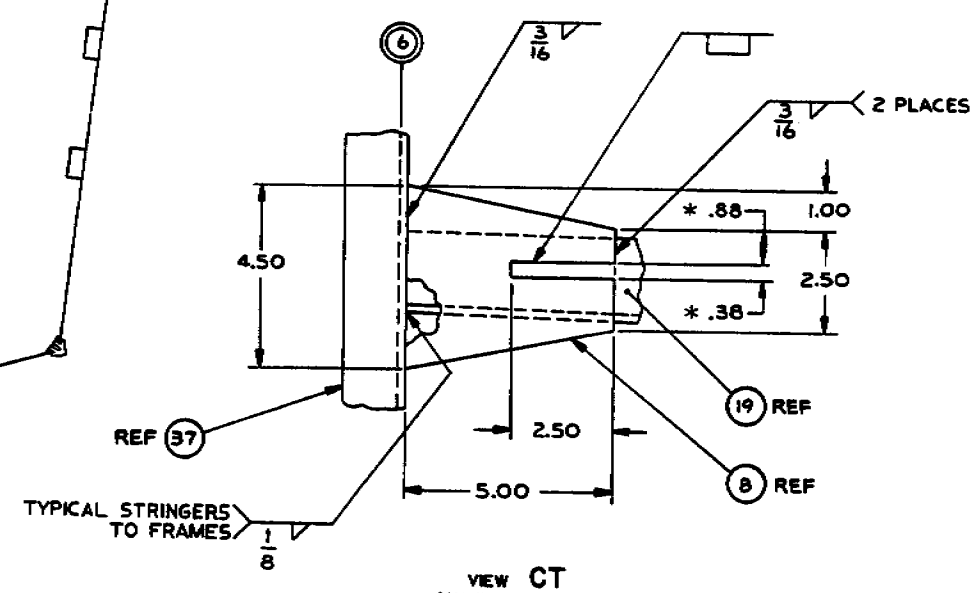

VIEW CT
(SH 7, ZONE D-4)

UNLESS OTHERWISE SPECIFIED DIM/TOLERANCES ARE IAW
ONE PLACE (.X) ±
TWO PLACE (.XX) ±
THREE PLACE (.XXX) ±
ANGLES ±
THIRD ANGLE PROJECTION
DO NOT SCALE THIS DRAWING
FOR INTERPRETATION OF DRAWING DOD-STD 100 APPLIES
REMOVE BURRS AND BREAK SHARP EDGES
SHARP CORNER .10
FILLET RADIO .10
MATERIAL

DRAWN BY TMY
DATE 7 DEC 83
CHECKED BY V.S. Pano 25 Oct 83
CONTRACT NO
DESIGN APPROVAL
DATE 4 Jan 84
APPROVED FOR PROCUREMENT
DATE 4 Mar 84

U.S. ARMY MOBILITY EQUIPMENT
RESEARCH AND DEVELOPMENT COMMAND
FORT BELVOIR, VIRGINIA 22060

HULL STRUCTURE, USCSB MK 2

SIZE	FSCM	DWG NO
A1	97403	13226E0449

SCALE
SHEET 34

ZONE	LTR	REVISIONS DESCRIPTION	DATE	APPROVED
	A	SEE ECP NO. 84HE0841	[illegible]	[illegible]
	B	SEE ECP NO. 84CE1204R1	[illegible]	[illegible]
	C	SEE ECP NO. 85CE1382	[illegible]	[illegible]
	D	SEE ECP NO. 85CE0732R2, 85CE1027R2, 86CV0285 AND 86CE0106R1	[illegible]	[illegible]
	E	SEE ECP NO. 86CE3486	[illegible]	[illegible]
	F	SEE ECP NO. 87CE0591	[illegible]	[illegible]
	K	SEE ECP NO. 89CE0045	[illegible]	[illegible]

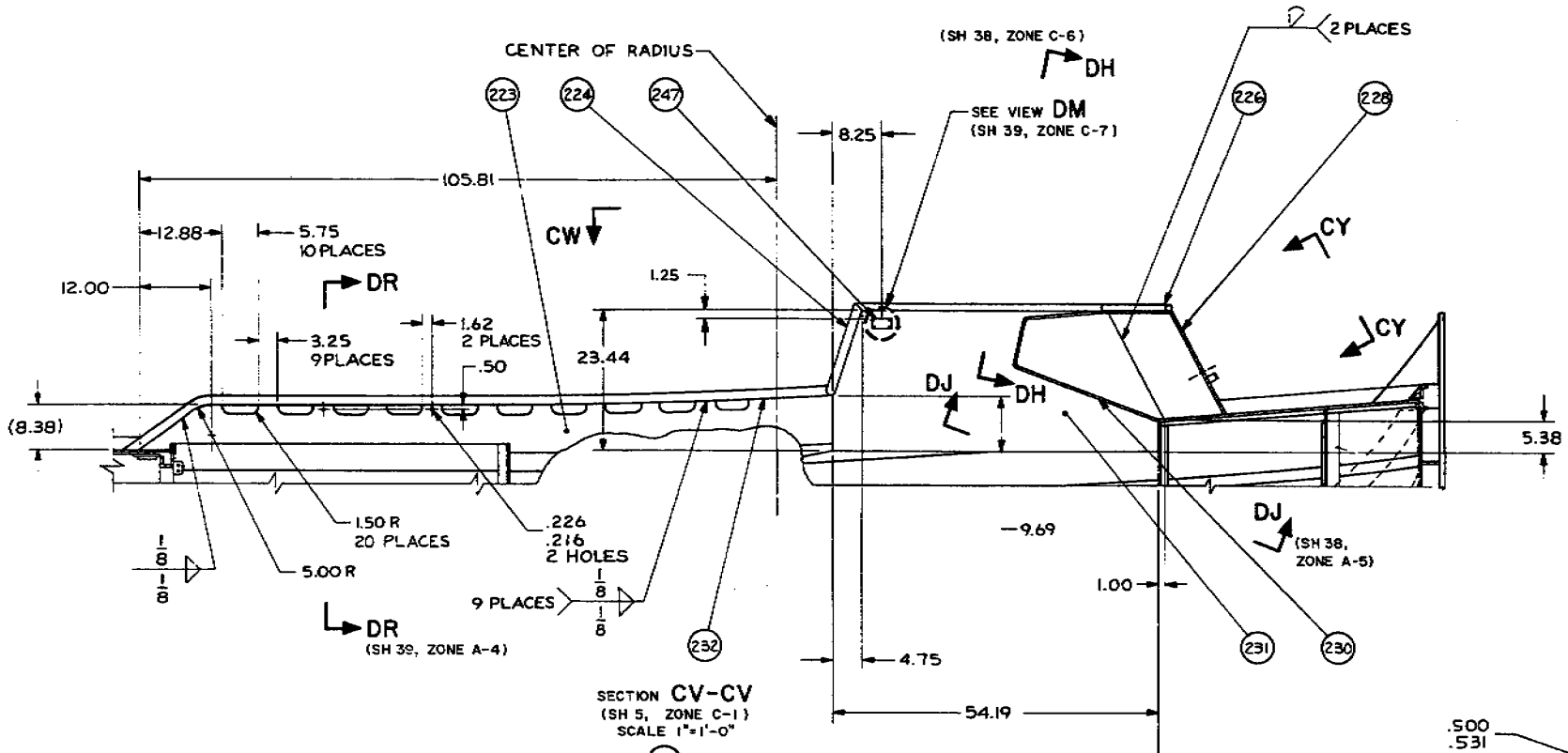

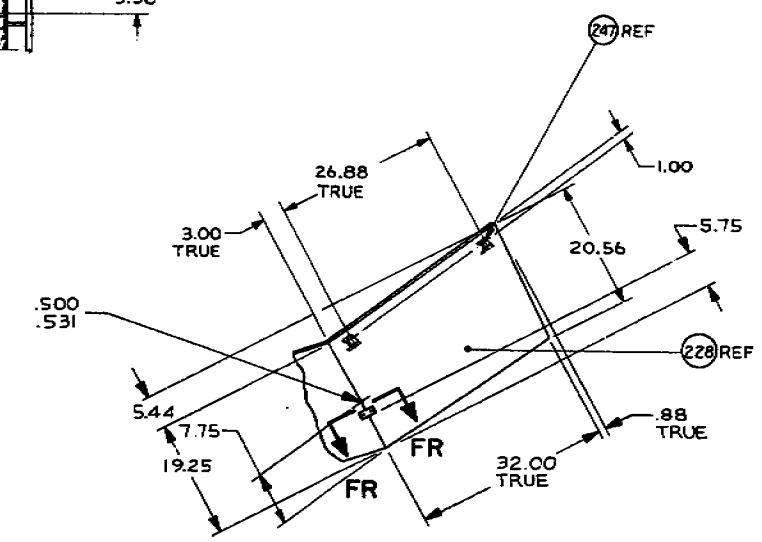

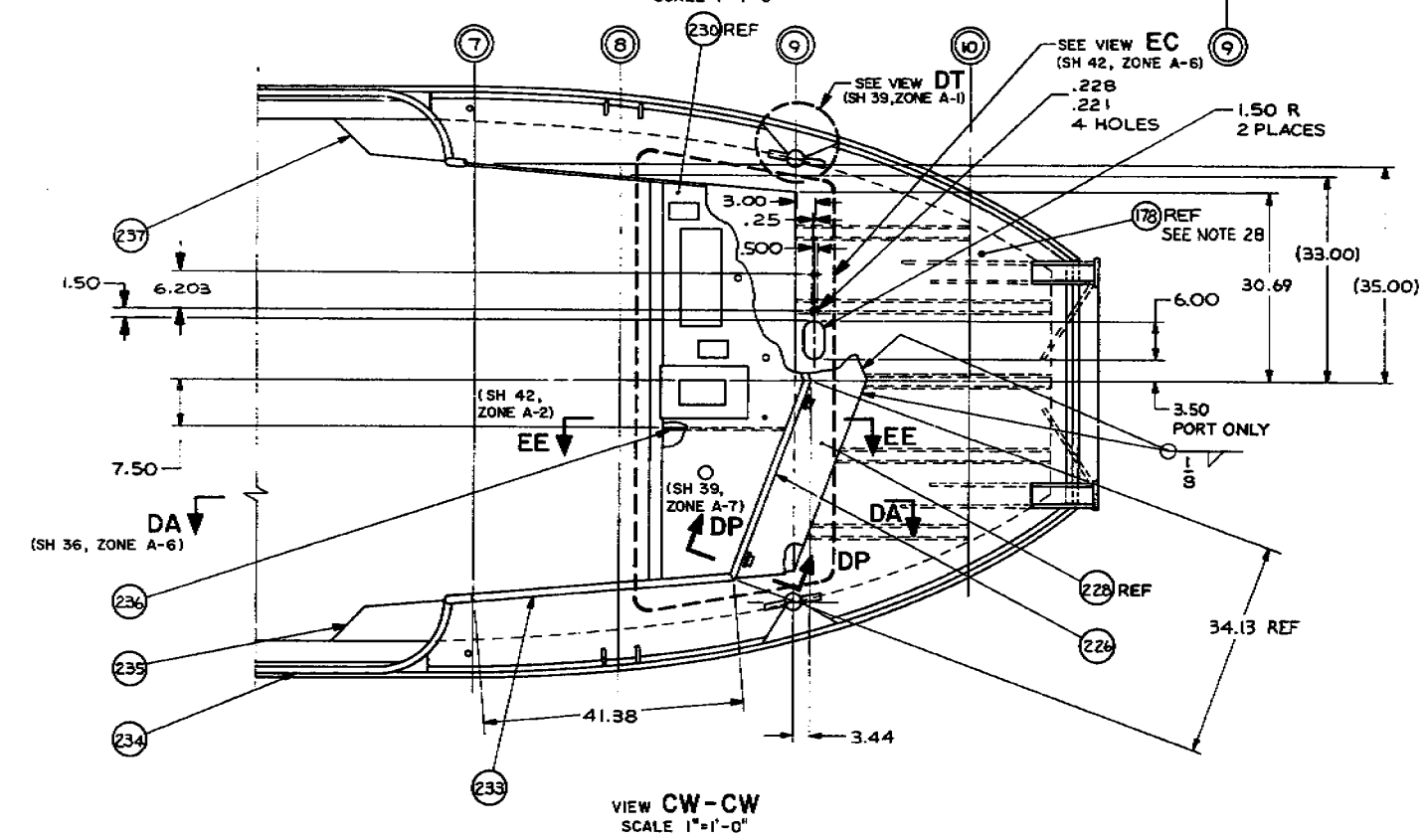

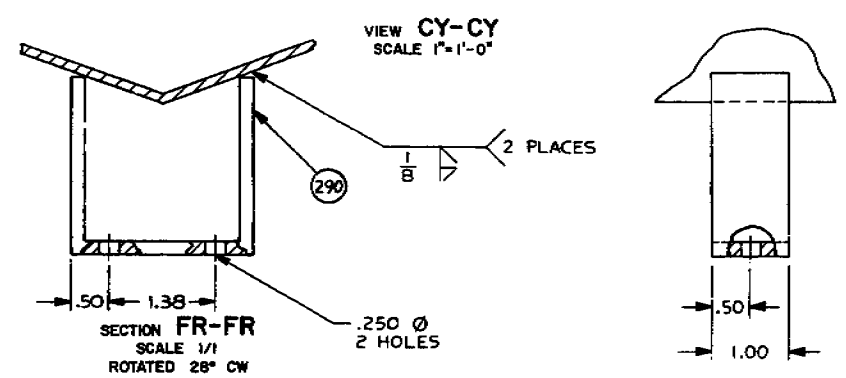

UNLESS OTHERWISE SPECIFIED DIM/TOLERANCES APP PER MIL
ONE PLACE ±.3
TWO PLACE ±.03
THREE PLACE ±.005
ANGLES ±
THIRD ANGLE PROJECTION
DO NOT SCALE THIS DRAWING
FOR INTERPRETATION OF DRAWING DOC STD 100 APPLIES
REMOVE BURRS AND BREAK SHARP EDGES
SHARP EDGES .10
FILLET RADII .10
MATERIAL

DRAWN BY DTH
DATE 7 DEC 83
CHECKED BY VJS PROD 29 DEC 83
ETB O.C.
COMPUTER NO
DESIGN APPROVAL
DATE
APPROVED FOR ENGINEERING
DATE 14 MAR 89

U.S. ARMY MOBILITY EQUIPMENT
RESEARCH AND DEVELOPMENT COMMAND
FORT BELVOIR, VIRGINIA 22060

HULL STRUCTURE, USCSB MK 2

SIZE	FSCM	DWG NO
A1	97403	13226E0449

SCALE
SHEET 35

ZONE	LTR	REVISIONS DESCRIPTION	DATE	APPROVED
	A	SEE ECP NO. 84HE0841	12 Jul 85	
	C	SEE ECP NO. 85CE1382	11 Apr	
	E	SEE ECP NO. 86CE3466	24 Apr 87	

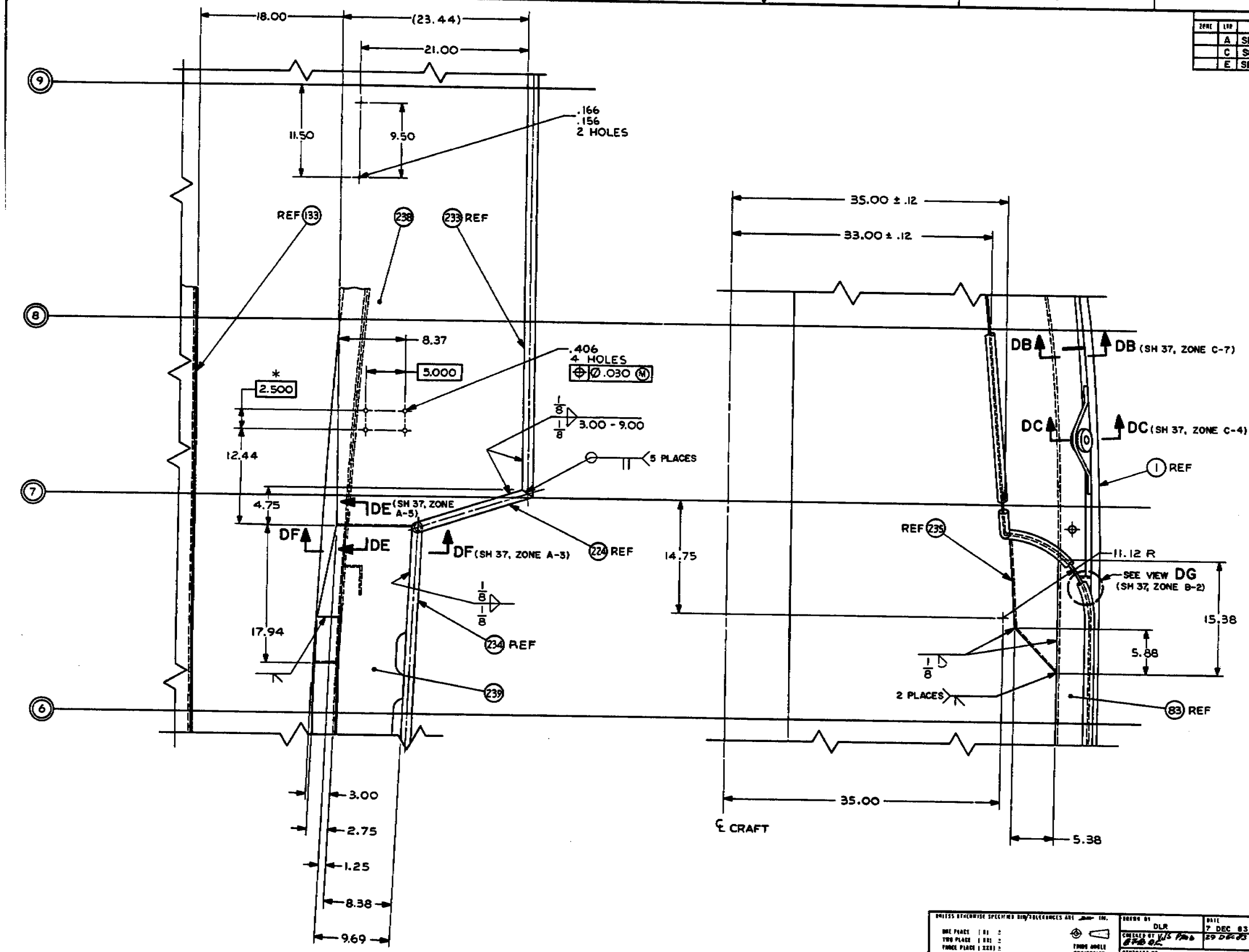

SECTION DA-DA
(SH 35, ZONE A-8)
SCALE 2" = 1'-0"
ROTATED 90° CCW

UNLESS OTHERWISE SPECIFIED DIM/TOLERANCES ARE ___ IN. ONE PLACE (.0) ± TWO PLACE (.00) ± THREE PLACE (.000) ± ANGLES ± THIRD ANGLE PROJECTION	DRAWN BY DLR	DATE 7 DEC 83	U.S. ARMY MOBILITY EQUIPMENT RESEARCH AND DEVELOPMENT COMMAND FORT BELVOIR, VIRGINIA 22060
DO NOT SCALE THIS DRAWING	CHECKED BY	29 DEC 83	HULL STRUCTURE, USCSB MK 2
FOR INTERPRETATION OF DRAWING DOD STD-100 APPLIES	CONTRACT NO		
REMOVE BURRS AND BREAK SHARP EDGES SHARP EDGES .50 FILLET RADII .20	DESIGN APPROVAL		
MATERIAL	DATE 4 Jan 84		
	APPROVED FOR PROCUREMENT	SIZE A1	FSCM 97403
	DATE OF PROC RP	SCALE	DWG NO 13226E0449
			SHEET 36

REVISIONS				
ZONE	LTR	DESCRIPTION	DATE	APPROVED
	C	SEE ECP NO. 85CE1382	11 Apr 86	
	E	SEE ECP NO. 86CE3466	20 Apr 87	
	F	SEE ECP NO. 87CE0591	3 Aug 87	

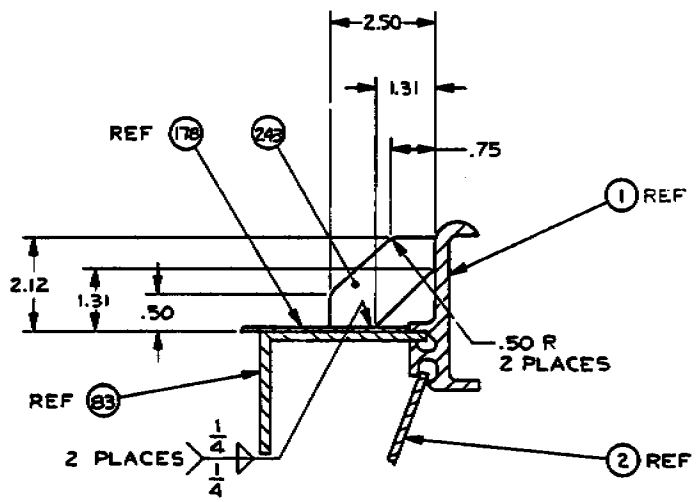

SECTION DB-DB
(SH 36, ZONE C-3)

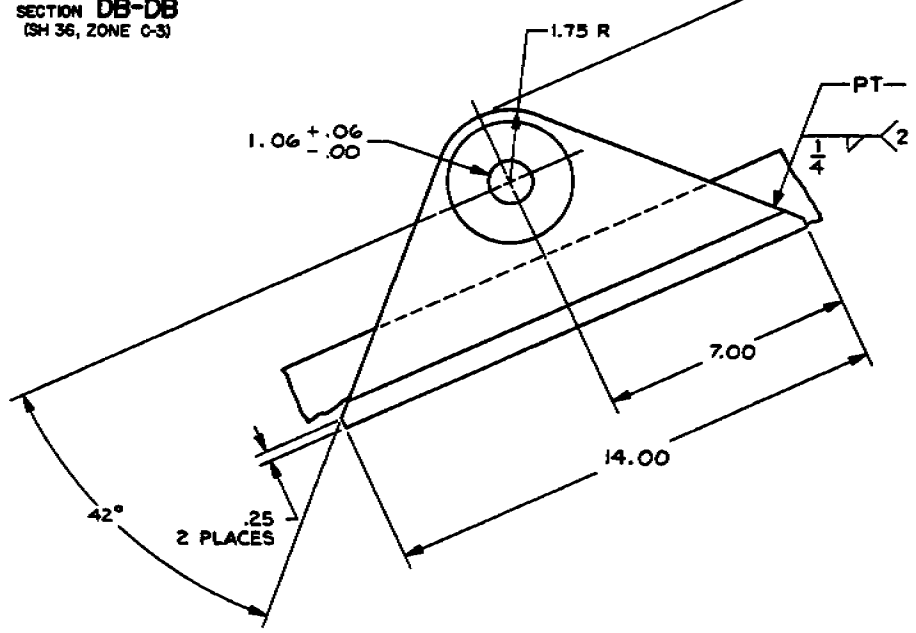

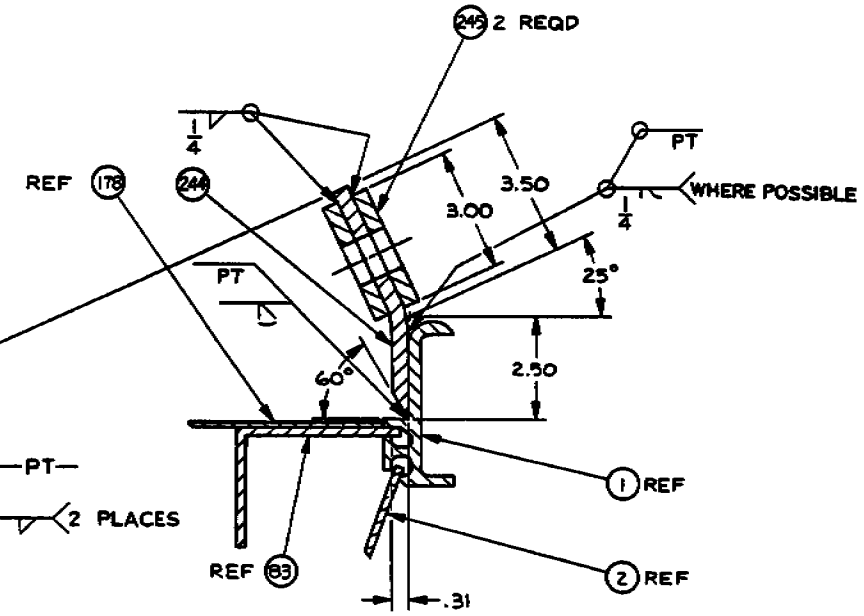

SECTION DC-DC
(SH 36, ZONE C-3)

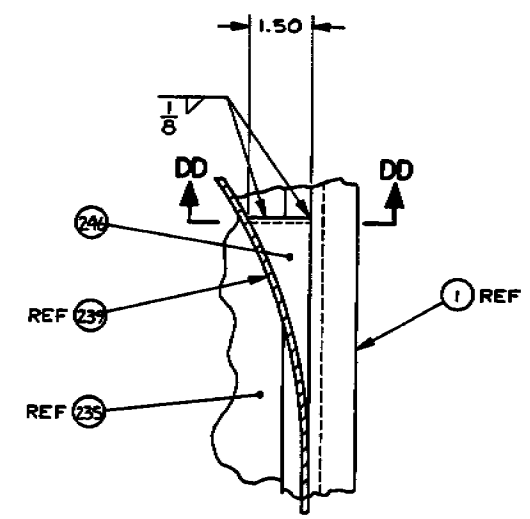

VIEW DG
(SH 36, ZONE B-2)

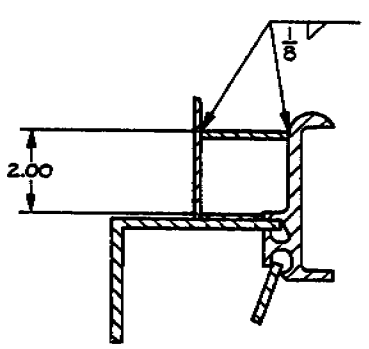

SECTION DD-DD

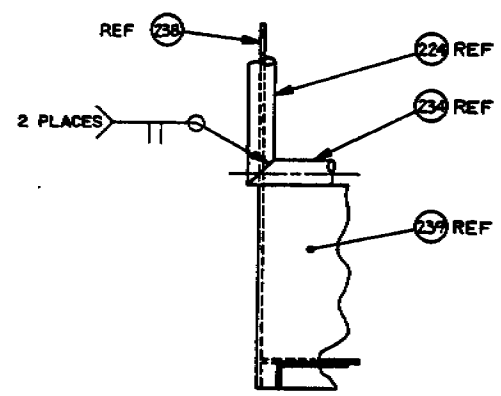

SECTION DF-DF
(SH 36, ZONE B-6)
SCALE 1/4

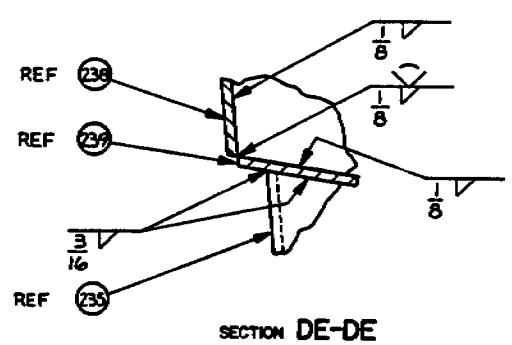

SECTION DE-DE
(SH 36, ZONE B-6)
SCALE 1/1

UNLESS OTHERWISE SPECIFIED DIM/TOLERANCES ARE per MIL
ONE PLACE (.X) ±
TWO PLACE (.XX) ±
THREE PLACE (.XXX) ±
ANGLES ±
THIRD ANGLE PROJECTION
DO NOT SCALE THIS DRAWING
FOR INTERPRETATION OF DRAWING DOD-STD-100 APPLIES
REMOVE BURRS AND BREAK SHARP EDGES
SHARP EDGES TO
FILLET RADIUS TO
MATERIAL

DRAWN BY PAG
DATE 7 DEC 83
CHECKED BY
CONTRACT NO
DESIGN APPROVAL
DATE 4 Jan 84
APPROVED FOR GOVERNMENT
DATE

U.S. ARMY MOBILITY EQUIPMENT
RESEARCH AND DEVELOPMENT COMMAND
FORT BELVOIR, VIRGINIA 22060

HULL STRUCTURE,
USCSB MK 2

SIZE	FSCM	DWG NO.
A1	97403	13226E0449

SCALE SHEET 37

REVISIONS				
ZONE	LTR	DESCRIPTION	DATE	APPROVED
	C	SEE ECP NO. 86CE1382	11 Apr 86	[illegible]
	D	SEE ECP NO. 86CE0732R2	25 Sep 86	[illegible]
	E	SEE ECP NO. 86CE3466	29 Apr 87	[illegible]
	F	SEE ECP NO. 87CE0991	30 Nov 87	[illegible]

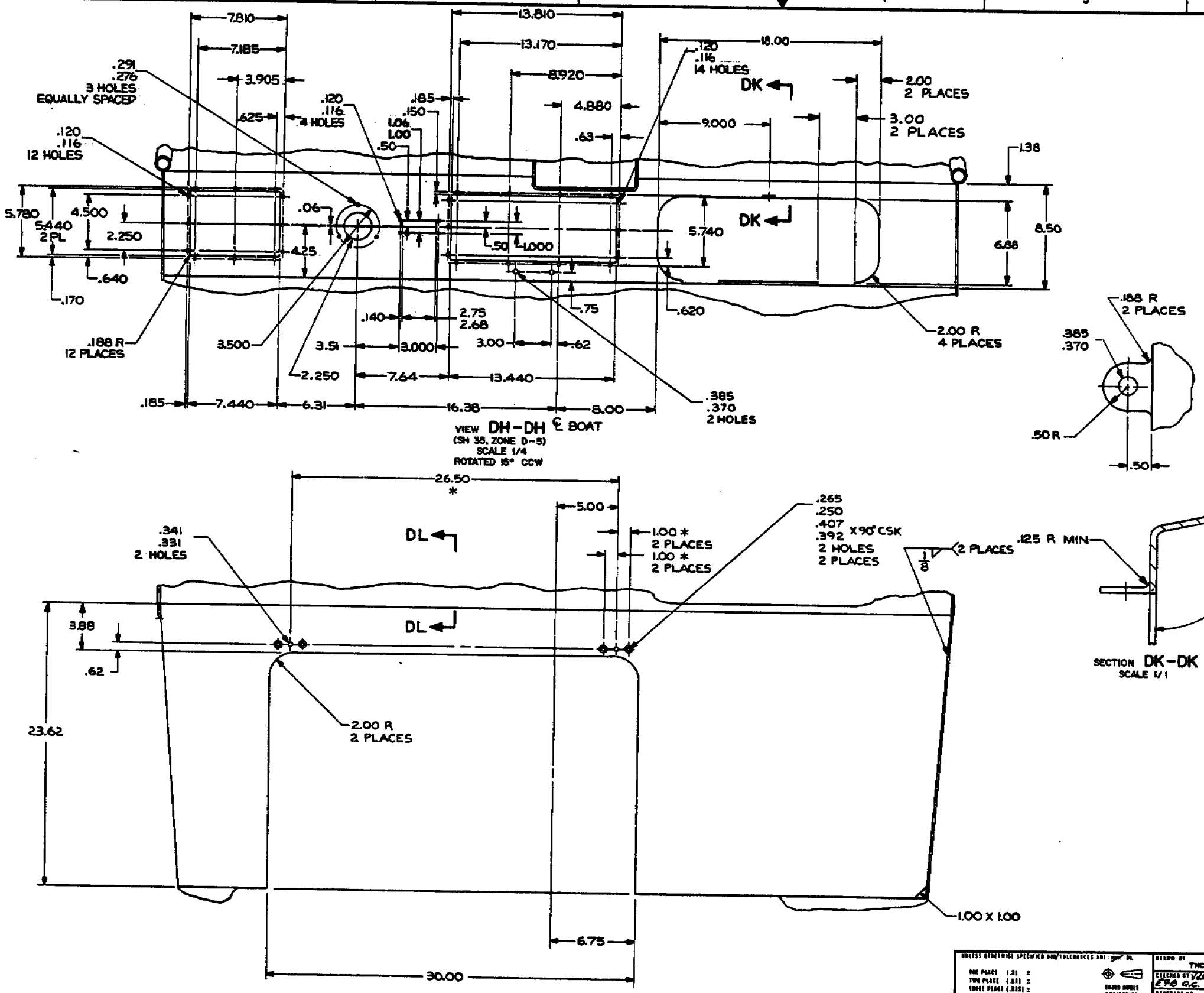

UNLESS OTHERWISE SPECIFIED DIM/TOLERANCES ARE: SEE DL
ONE PLACE (.X) ±
TWO PLACE (.XX) ±
THREE PLACE (.XXX) ±
ANGLES ±
ROUND ANGLE PORCELAIN
DO NOT SCALE THIS DRAWING
FOR INTERPRETATION OF DRAWING DOD-STD-100 APPLIES
REMOVE BURRS AND BREAK SHARP EDGES
SHARP EDGES TO
FILLET RADII TO
MATERIAL

DRAWN BY TMC
DATE 7 DEC 83
CHECKED BY [illegible]
ENG O.C.
CONTRACT NO
DESIGN APPROVAL [illegible]
DATE 4 Jan 84
APPROVED FOR PROCUREMENT [illegible]
DATE 4 JAN 84

U.S. ARMY MOBILITY EQUIPMENT
RESEARCH AND DEVELOPMENT COMMAND
FORT BELVOIR, VIRGINIA 22060

HULL STRUCTURE, USCSB MK 2

SIZE	FSCM	DWG NO.
A1	97403	13226E0449

SCALE
SHEET 38

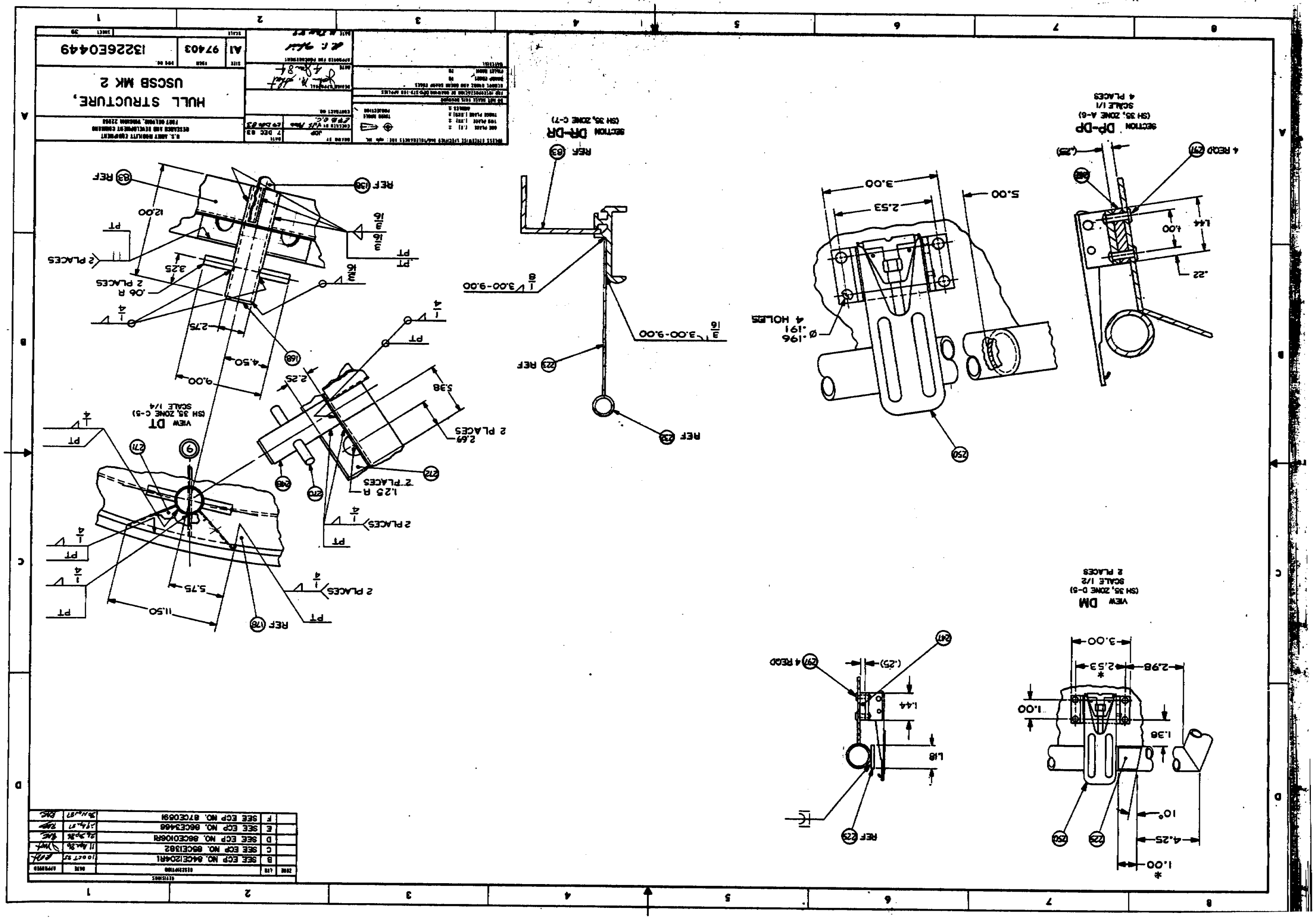

ZONE	LTR	REVISIONS	DATE	APPROVED
	B	SEE ECP NO. 84CE12044R1	10 OCT 87	
	C	SEE ECP NO. 85CE13182	11 Apr 86	
	D	SEE ECP NO. 86CE01068R	24 Sep 86	
	E	SEE ECP NO. 86CE3468	17 Apr 87	
	F	SEE ECP NO. 87CE0691	30 Nov 87	

U.S. ARMY MOBILITY EQUIPMENT RESEARCH AND DEVELOPMENT COMMAND
FORT BELVOIR, VIRGINIA 22060

HULL STRUCTURE, USCSB MK 2

SIZE	FSCM	PART NO.
A1	97403	13226E0449

SCALE — SHEET 39

ZONE	LTR	DESCRIPTION	DATE	APPROVED
	C	SEE ECP NO. 85CE1382	1 Apr 86	RAE
	E	SEE ECP NO. 86CE3466	23 Apr 87	RAE
	F	SEE ECP NO. 87CE0591	3 Aug 87	RAE

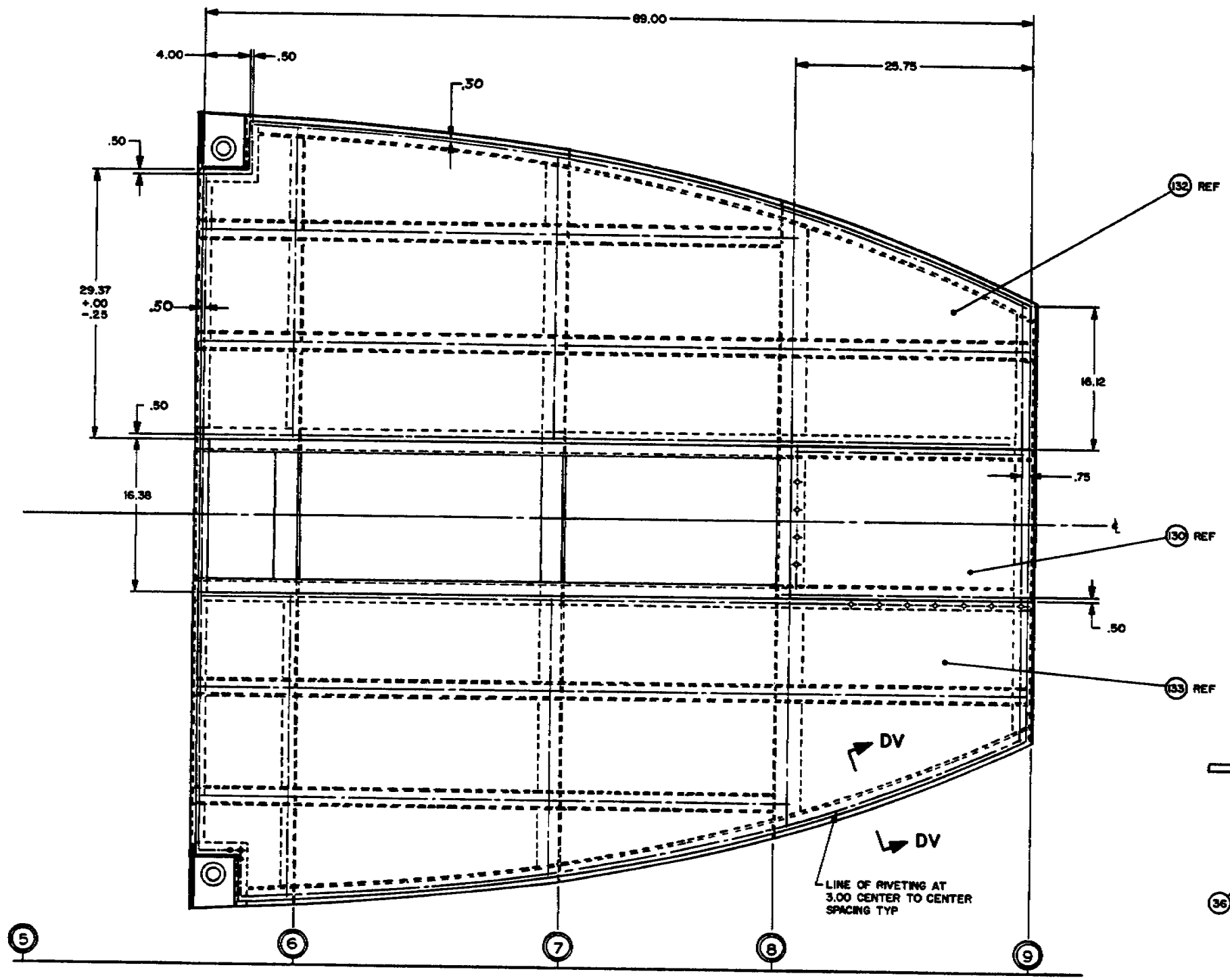

SECTION DU-DU
(SH 4, ZONE C-4)
SCALE 2" = 1'-0"

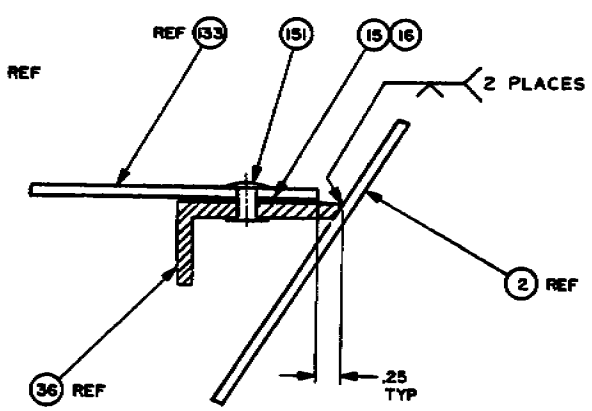

SECTION DV-DV
SCALE 1/1
ROTATED 70° CCW

UNLESS OTHERWISE SPECIFIED DIMENSIONS AND TOLERANCES ARE: SEE SH.
ONE PLACE (.0) ±
TWO PLACE (.00) ±
THREE PLACE (.000) ±
ANGLES ±
THIRD ANGLE PROJECTION
DO NOT SCALE THIS DRAWING
FOR INTERPRETATION OF DRAWING DOD-STD-100 APPLIES
REMOVE BURRS AND BREAK SHARP EDGES
SHARP EDGES 10
FILLET GRAIN 10
MATERIAL

DRAWN BY TRR
DATE 7 DEC 83
CHECKED BY
CONTRACT NO.
DESIGN APPROVED
DATE 4 Jan 84
APPROVED FOR PROCUREMENT
DATE

U.S. ARMY MOBILITY EQUIPMENT
RESEARCH AND DEVELOPMENT COMMAND
FORT BELVOIR, VIRGINIA 22060

HULL STRUCTURE, USCSB MK 2

SIZE A1
FSCM 97403
DWG NO. 13226E0449
SCALE
SHEET 40

REVISIONS				
ZONE	LTR	DESCRIPTION	DATE	APPROVED
	C	SEE ECP NO. 85CE1382	11 Apr 86	
	F	SEE ECP NO. 87CE0591	30 Nov 87	

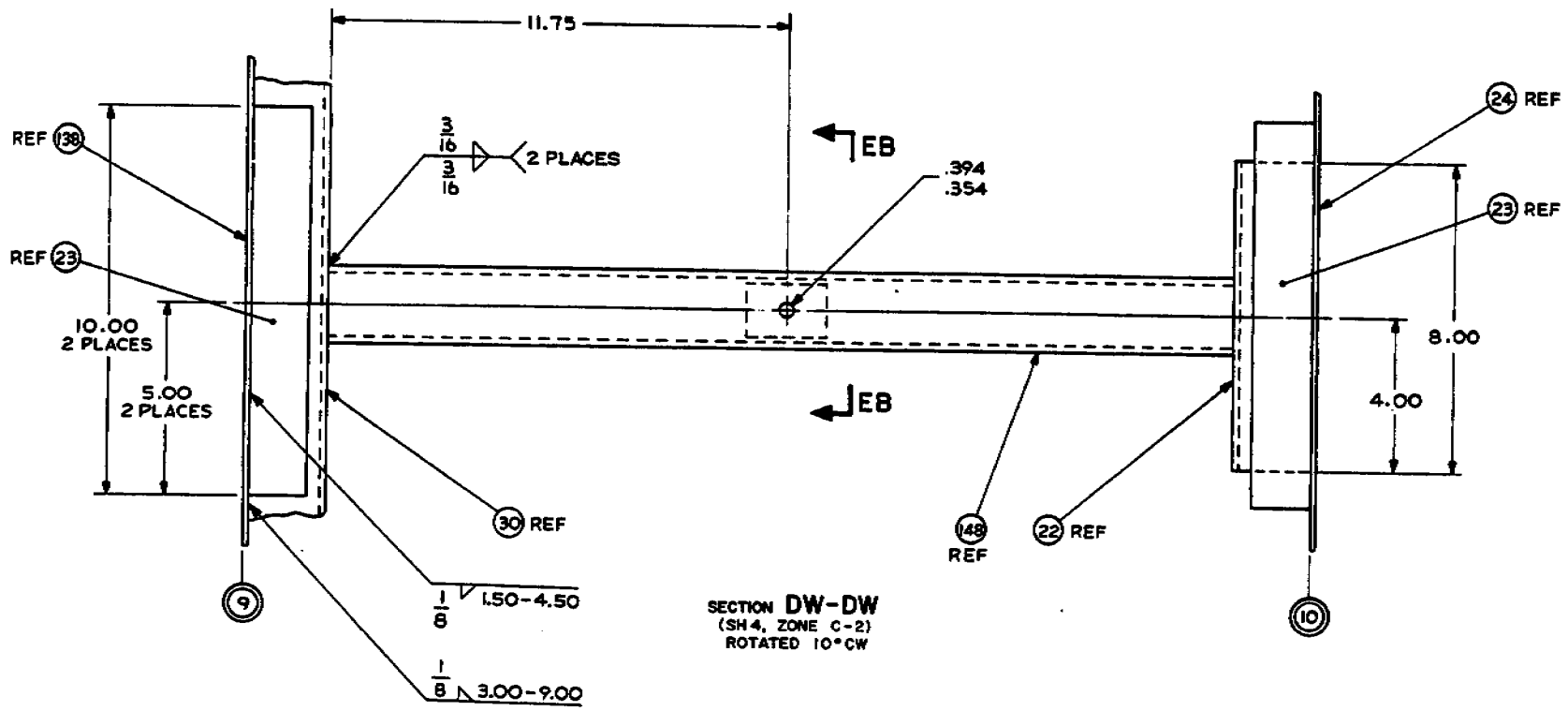

SECTION DW-DW
(SH 4, ZONE C-2)
ROTATED 10° CW

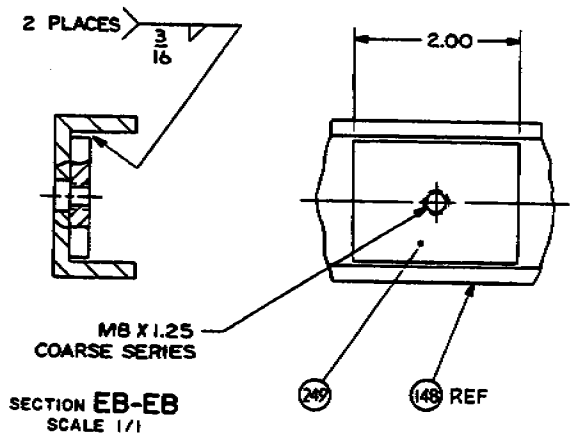

SECTION EB-EB
SCALE 1/1

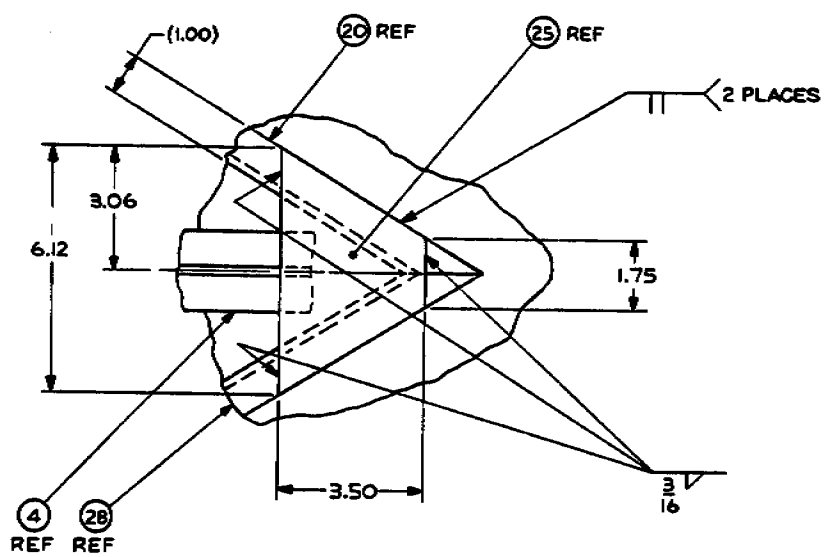

VIEW DY
(SH 7, ZONE B-1)

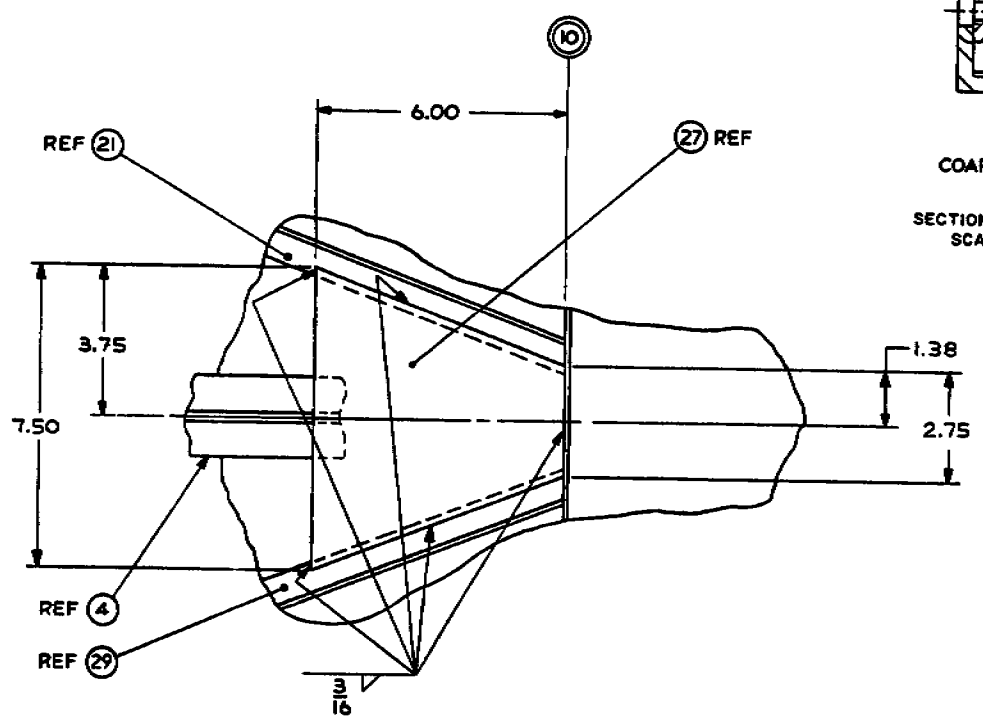

VIEW EA
(SH 7, ZONE C-1)

UNLESS OTHERWISE SPECIFIED DIM/TOLERANCES ARE IN.
ONE PLACE (.X) ±
TWO PLACE (.XX) ±
THREE PLACE (.XXX) ±
ANGLES ±
THIRD ANGLE PROJECTION
DO NOT SCALE THIS DRAWING
FOR INTERPRETATION OF DRAWINGS DOD-STD-100 APPLIES
REMOVE BURRS AND BREAK SHARP EDGES
SHARP EDGES TO
FINISH DAMP TO
MATERIAL

DRAWN BY DTH
DATE 7 DEC 83
CHECKED BY
CONTRACT NO
DESIGN APPROVAL
DATE
APPROVED FOR PROCUREMENT
DATE OF PROC DOC

U.S. ARMY MOBILITY EQUIPMENT
RESEARCH AND DEVELOPMENT COMMAND
FORT BELVOIR, VIRGINIA 22060

HULL STRUCTURE, USCSB MK 2

SIZE	FSCM	DWG NO
A1	97403	13226E0449

SCALE SHEET 41

REVISIONS				
ZONE	LTR	DESCRIPTION	DATE	APPROVED
	A	SEE ECP NO. 84HE0641	12 JUL 85	
	C	SEE ECP NO. 86CE1382	11 APR 86	
	E	SEE ECP NO. 86CE3466	29 APR 87	

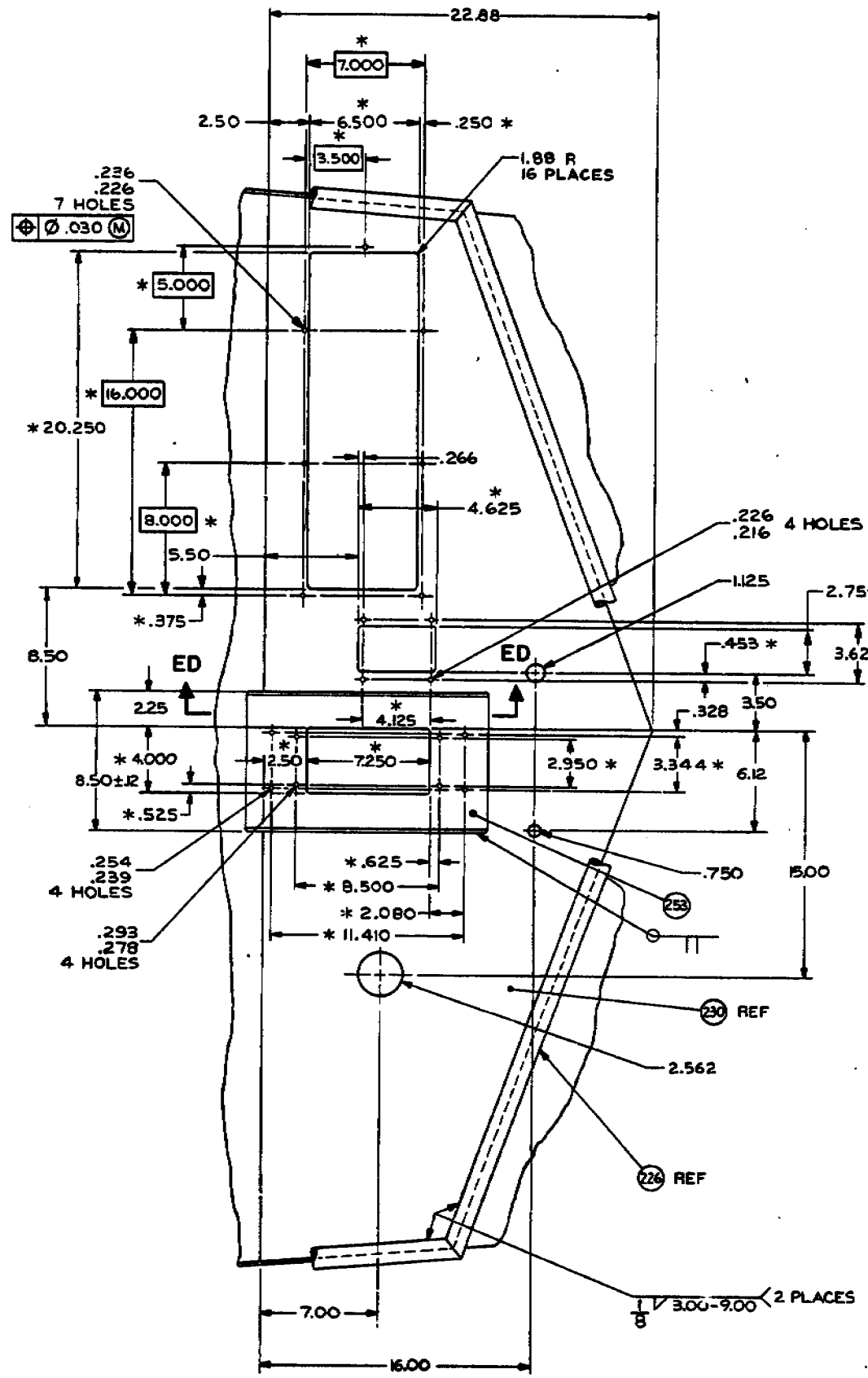

VIEW EC
(SH 35, ZONE B-5)
SCALE 1/4

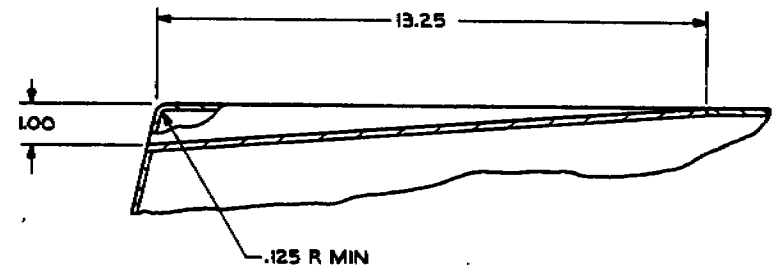

SECTION ED-ED

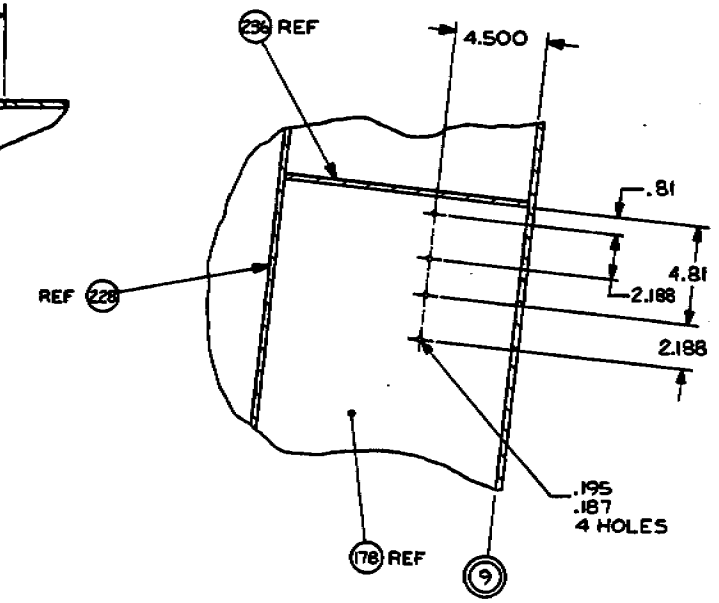

SECTION FD-FD

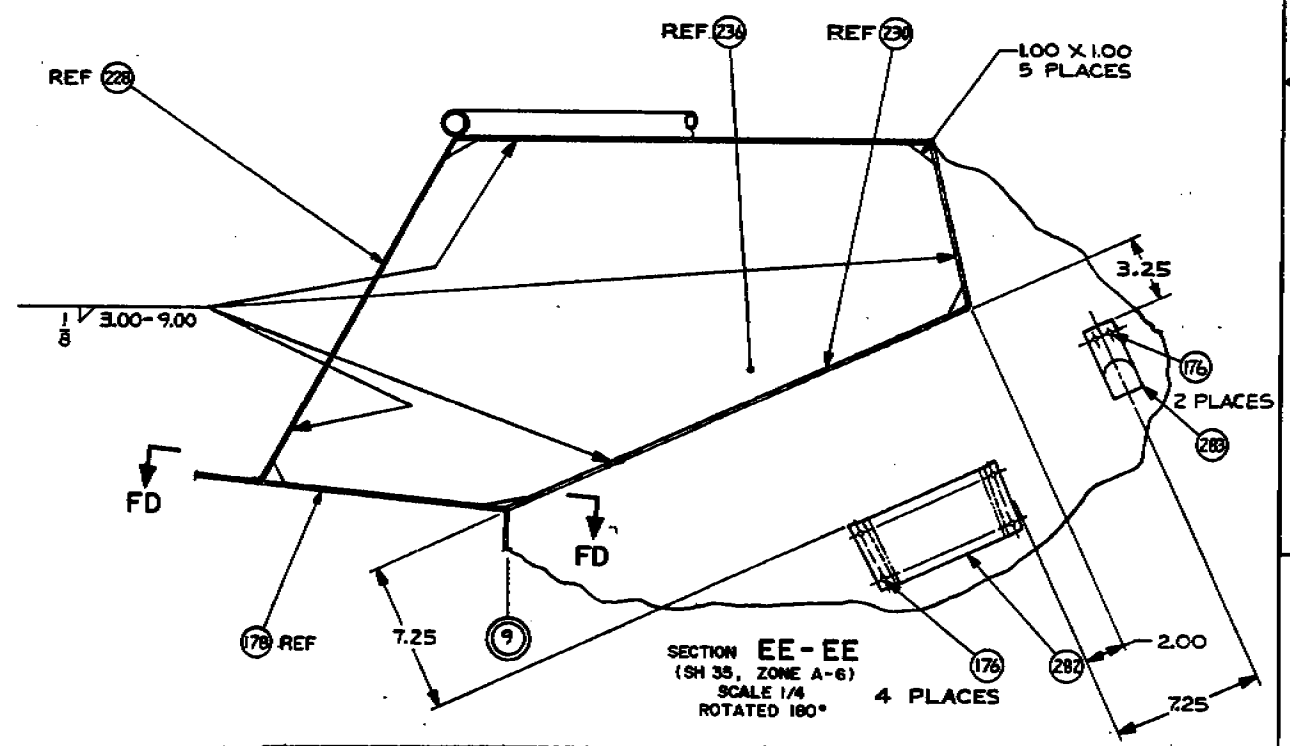

SECTION EE-EE
(SH 35, ZONE A-6)
SCALE 1/4
ROTATED 180°

UNLESS OTHERWISE SPECIFIED DIM/TOLERANCES ARE: SEE BOX

ONE PLACE (.X) ±
TWO PLACE (.XX) ±
THREE PLACE (.XXX) ±
ANGLES ±

THIRD ANGLE PROJECTION

DO NOT SCALE THIS DRAWING

FOR INTERPRETATION OF DRAWING DOD STD-100 APPLIES

REMOVE BURRS AND BREAK SHARP EDGES

BROKEN EDGES TO
FILLET RADIUS TO

MATERIAL

DRAWN BY RLG DATE 6 DEC 83
CHECKED BY VJS DATE
ETB QC.
CONTRACT NO.
DESIGN APPROVAL DATE 4 Jan 84
APPROVED FOR PROCUREMENT
DATE 4 Jan 84

U.S. ARMY MOBILITY EQUIPMENT
RESEARCH AND DEVELOPMENT COMMAND
FORT BELVOIR, VIRGINIA 22060

HULL STRUCTURE, USCSB MK 2

SIZE	FSCM	DWG NO
A1	97403	13226E0449

SCALE SHEET 42

REVISIONS				
ZONE	LTR	DESCRIPTION	DATE	APPROVED
	A	SEE ECP NO. 84HE0841	12 JUL 85	
	C	SEE ECP NO. 86CE1382	11 APR 86	
	E	SEE ECP NO. 86CE3466	29 APR 87	

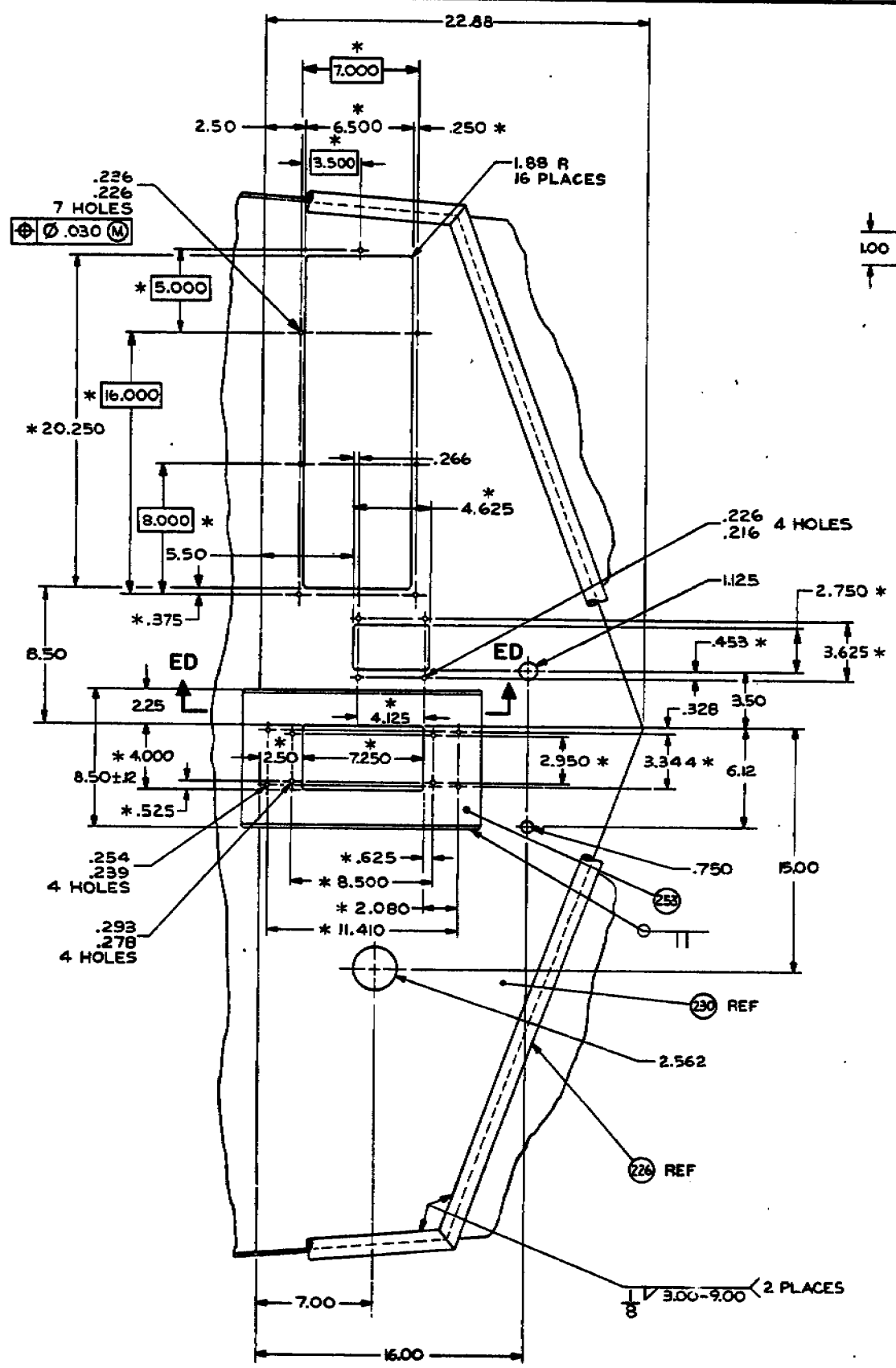

VIEW EC
(SH 38, ZONE B-5)
SCALE 1/4

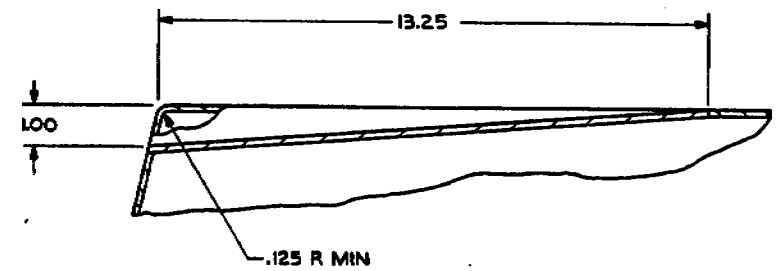

SECTION ED-ED

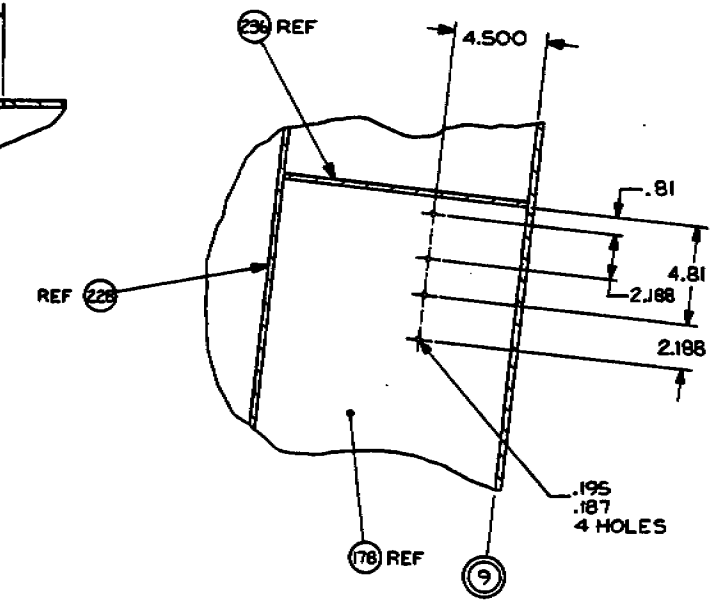

SECTION FD-FD

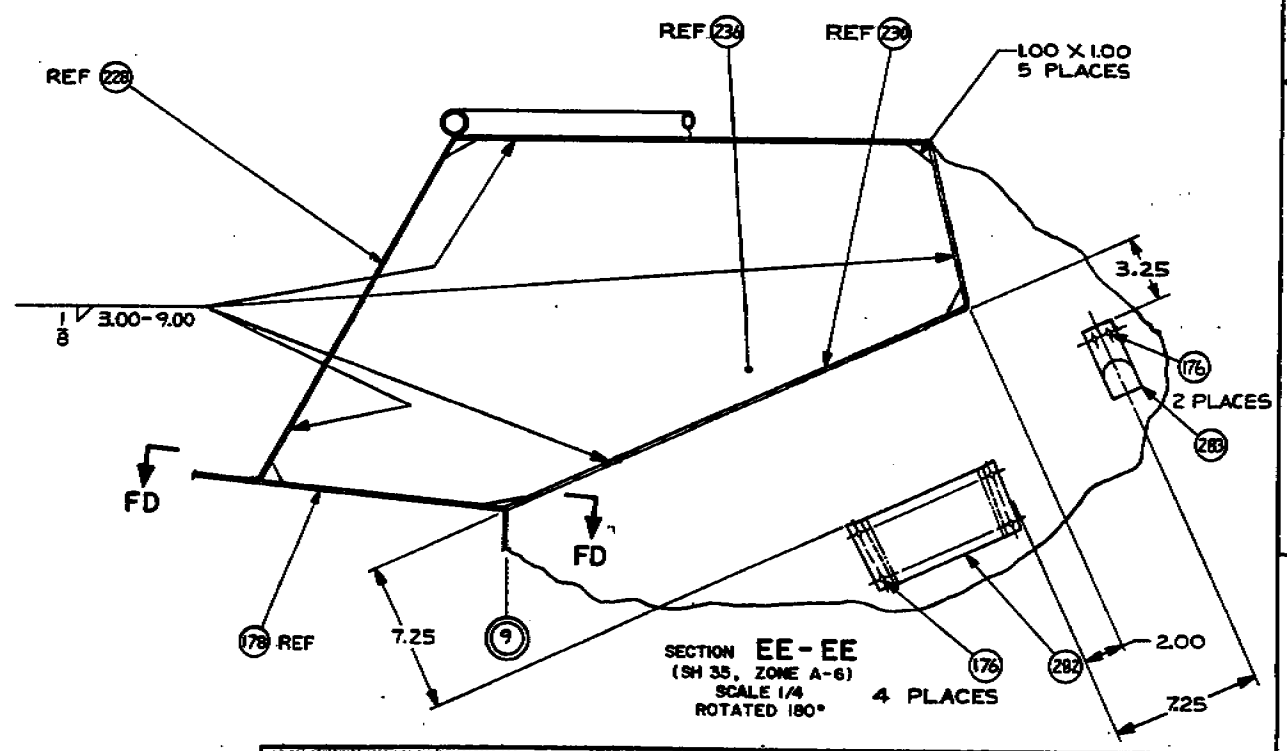

SECTION EE-EE
(SH 35, ZONE A-6)
SCALE 1/4
ROTATED 180°

UNLESS OTHERWISE SPECIFIED DIM/TOLERANCES ARE: part IAW.
DEC PLACE (.X) ±
TWO PLACE (.XX) ±
THREE PLACE (.XXX) ±
ANGLES ±
THIRD ANGLE PROJECTION
DO NOT SCALE THIS DRAWING
FOR INTERPRETATION OF DRAWING DOD-STD-100 APPLIES
REMOVE BURRS AND BREAK SHARP EDGES
SHARP EDGES TO
FINAL BARR TO
MATERIAL

DRAWN BY RLB DATE 8 DEC 83
CHECKED BY VJS DATE
CONTRACT NO.
DESIGN APPROVAL John M. Hirt DATE 4 Jan 84
APPROVED FOR PROCUREMENT R. C. Hirt DATE 4 Jan 84

U.S. ARMY MOBILITY EQUIPMENT
RESEARCH AND DEVELOPMENT COMMAND
FORT BELVOIR, VIRGINIA 22060

HULL STRUCTURE, USCSB MK 2

SIZE	FSCM	DWG NO
A1	97403	13226E0449

SCALE SHEET 42

REVISIONS				
ZONE	LTR	DESCRIPTION	DATE	APPROVED
	C	SEE ECP NO. 85CE1362	1 Apr 86	RAE
	E	SEE ECP NO. 86CE3466	25 Apr 87	RAE
	F	SEE ECP NO. 87CE0591	24 Nov 87	RAE

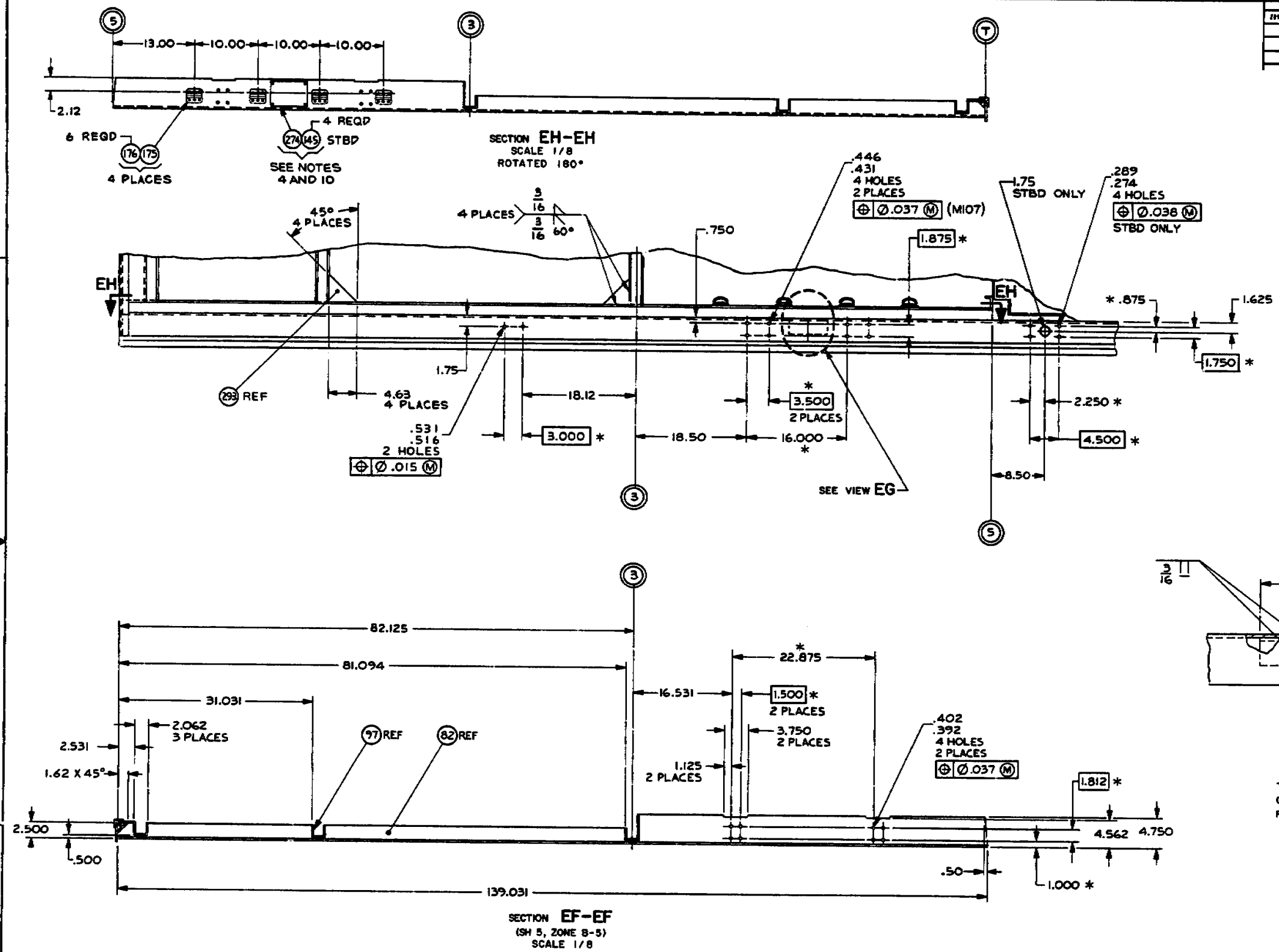

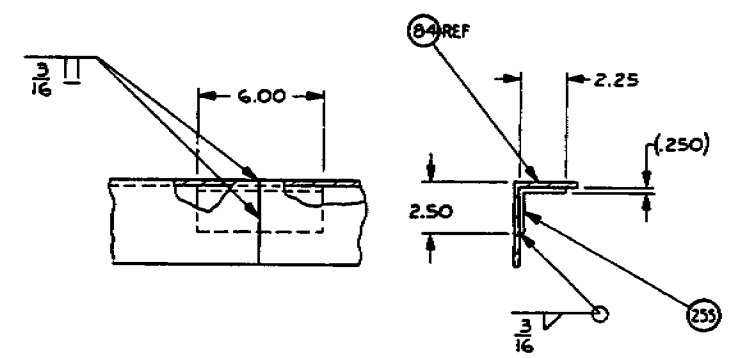

VIEW EG
SCALE 1/4
TYPICAL WHEN SPLICING OF GUNWHALE ANGLE IS REQUIRED

UNLESS OTHERWISE SPECIFIED DIM/TOLERANCES ARE ... IN.
ONE PLACE (X) ±
TWO PLACE (XX) ±
THREE PLACE (XXX) ±
ANGLES ±
THIRD ANGLE PROJECTION
DO NOT SCALE THIS DRAWING
FOR INTERPRETATIONS OF DRAWING DOD STD 100 APPLIES
REMOVE BURRS AND BREAK SHARP EDGES
SHARP EDGES TO
FILLET RADII TO
MATERIAL

DRAWN BY JOE
DATE 8 DEC 83
CHECKED BY
CONTRACT NO
METHOD APPROVED
DATE 4 Jan 84
APPROVED FOR PROCUREMENT
DATE

U.S. ARMY MOBILITY EQUIPMENT
RESEARCH AND DEVELOPMENT COMMAND
FORT BELVOIR, VIRGINIA 22060

HULL STRUCTURE, USCSB MK 2

SIZE	FSCM	DWG NO
A1	97403	13226E0449

SCALE
SHEET 43

REVISIONS				
ZONE	LTR	DESCRIPTION	DATE	APPROVED
	A	SEE ECP NO. 84HE0841	12 Oct 85	[illegible]
	C	SEE ECP NO. 85CE1382	11 Apr 86	RAB
	E	SEE ECP NO. 86CE3466	29 Apr 87	RAB
	F	SEE ECP NO. 87CE0591	30 Jun 87	RAB

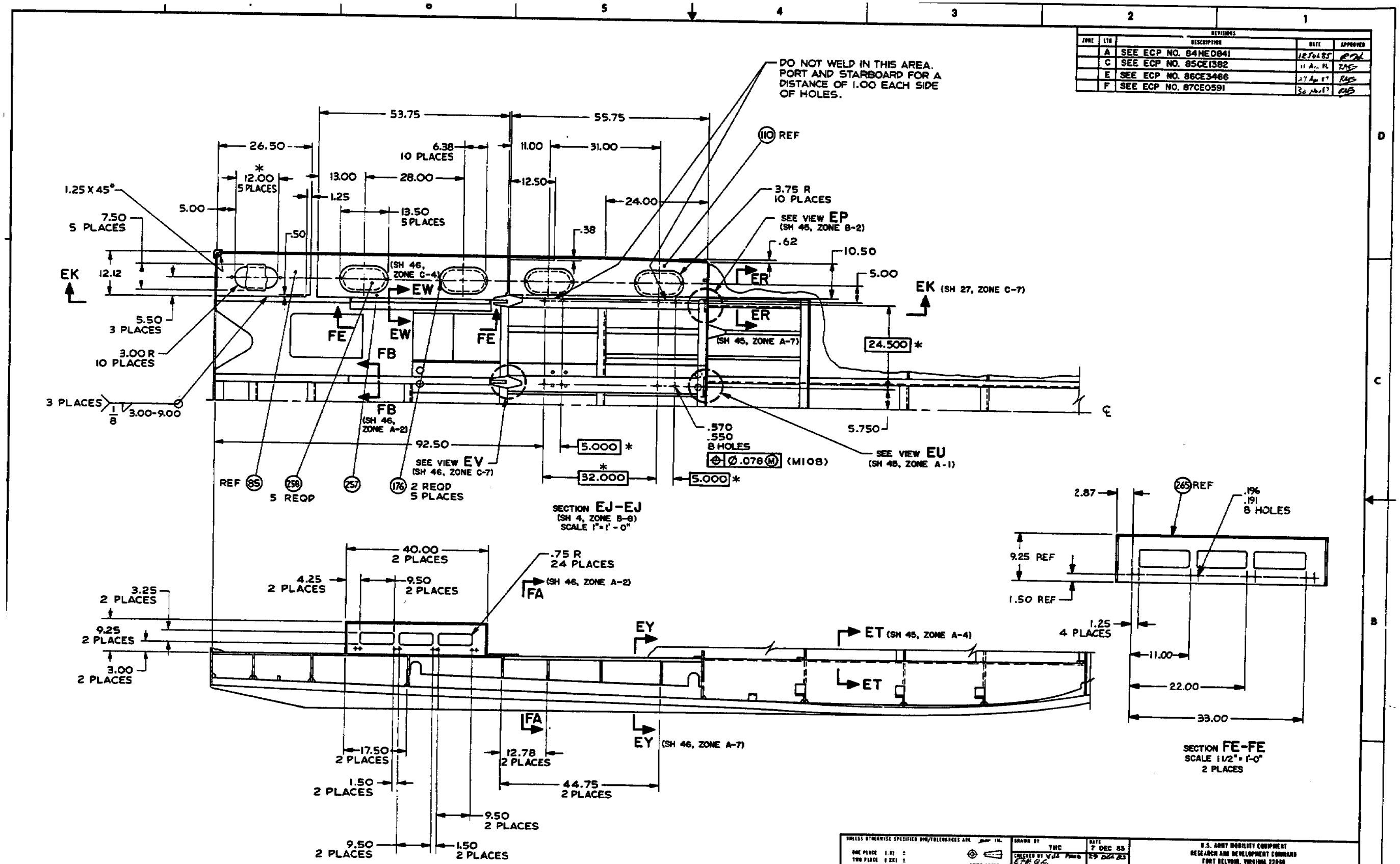

UNLESS OTHERWISE SPECIFIED DIM/TOLERANCES ARE per ins.
ONE PLACE (.X) ±
TWO PLACE (.XX) ±
THREE PLACE (.XXX) ±
ANGLES ±
THIRD ANGLE PROJECTION
DO NOT SCALE THIS DRAWING
FOR INTERPRETATION OF DRAWING DOD-STD-100 APPLIES
REMOVE BURRS AND BREAK SHARP EDGES
SHARP EDGES 10
FILLET RADIUS 10
MATERIAL

DRAWN BY THC DATE 7 DEC 83
CHECKED BY [illegible] 29 Oct 85
CONTRACT NO
DESIGN APPROVAL [illegible] DATE 4 Jan 84
APPROVED FOR PROCUREMENT [illegible] DATE 30 Jan 84

U.S. ARMY MOBILITY EQUIPMENT RESEARCH AND DEVELOPMENT COMMAND FORT BELVOIR, VIRGINIA 22060

HULL STRUCTURE, USCSB MK 2

SIZE A1 | FSCM 97403 | DWG NO. 13226E0449
SCALE | SHEET 44

REVISIONS				
ZONE	LTR	DESCRIPTION	DATE	APPROVED
	A	SEE ECP NO. 84HE0841	12 JUL 85	[illegible]
	C	SEE ECP NO. 85CE1382	11 Aug 86	[illegible]
	E	SEE ECP NO. 86CE3466	29 Apr 87	[illegible]
	F	SEE ECP NO. 87CE0591	30 Aug 87	[illegible]

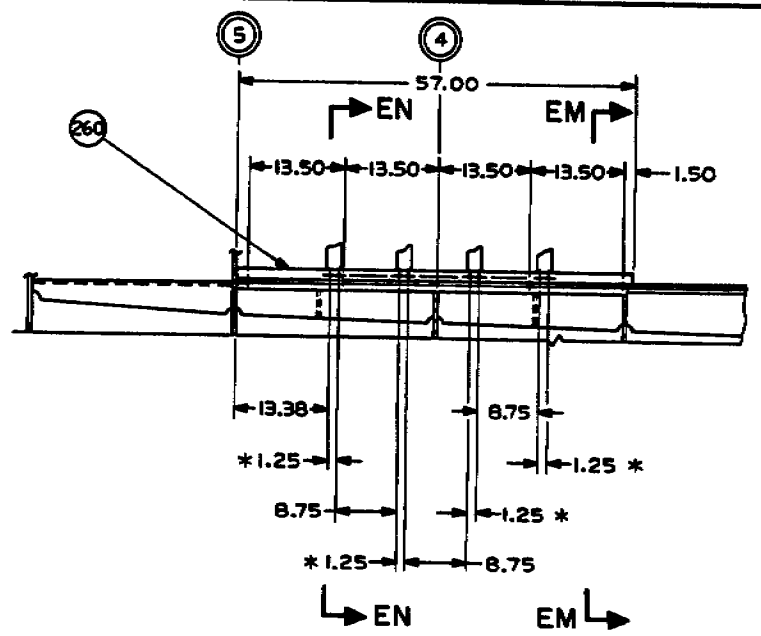

SECTION FK-FK
(SH 5, ZONE B-6)
SCALE 1" = 1'-0"
ROTATED 180°

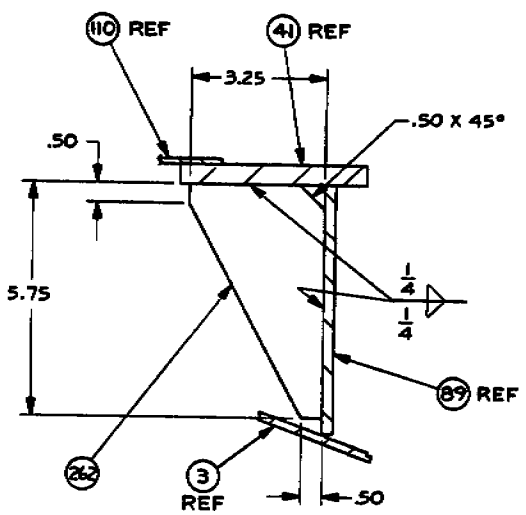

SECTION EM-EM

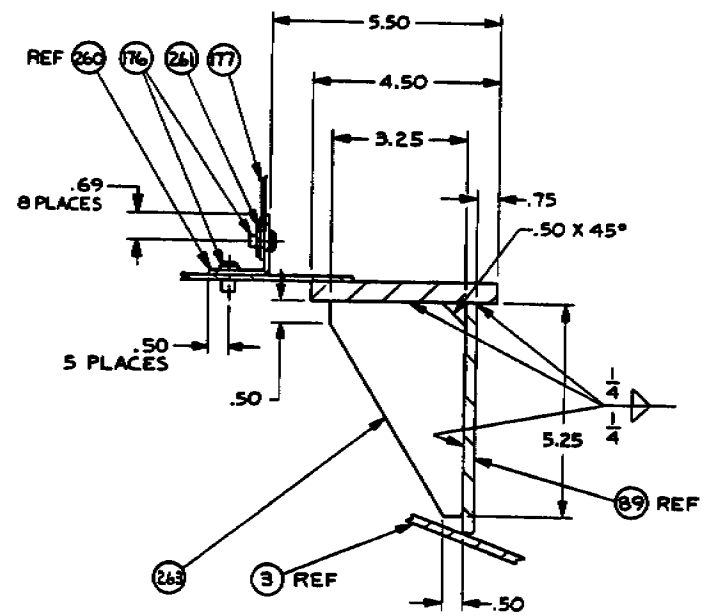

SECTION EN-EN

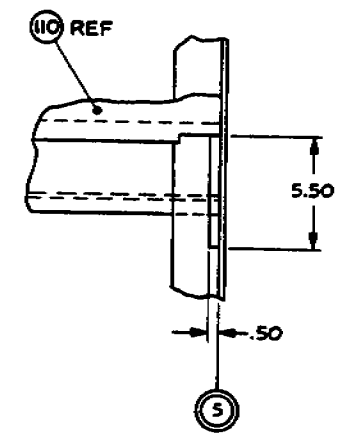

VIEW EP
(SH 44, ZONE D-4)
SCALE 1/4

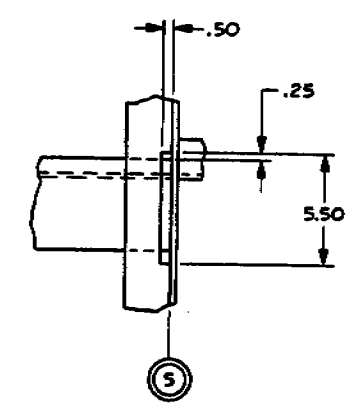

VIEW EU
(SH 44, ZONE C-4)
SCALE 1/4

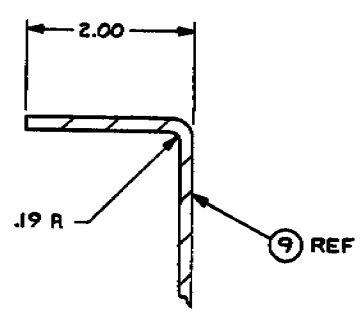

SECTION ER-ER
(SH 44, ZONE C-4)
SCALE 1/1
ROTATED 90° CCW

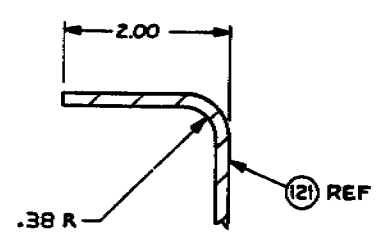

SECTION ET-ET
(SH 44, ZONE B-3)
SCALE 1/1

UNLESS OTHERWISE SPECIFIED DIM/TOLERANCES ARE [illegible]
ONE PLACE (.X) ±
TWO PLACE (.XX) ±
THREE PLACE (.XXX) ±
ANGLES ±
THIRD ANGLE PROJECTION
DO NOT SCALE THIS DRAWING
FOR INTERPRETATION OF DRAWING DOD-STD-100 APPLIES
REMOVE BURRS AND BREAK SHARP EDGES
SHARP EDGES TO
FILLET BOW TO
MATERIAL

DRAWN BY TRR
DATE 7 DEC 83
CHECKED BY [illegible]
CONTRACT NO
DESIGN APPROVAL [illegible]
DATE 4 Jan 84
APPROVED FOR PROCUREMENT [illegible]
DATE 4 JAN 84

U.S. ARMY MOBILITY EQUIPMENT
RESEARCH AND DEVELOPMENT COMMAND
FORT BELVOIR, VIRGINIA 22060

HULL STRUCTURE,
USCSB MK 2

SIZE	FSCM	DWG NO.
A1	97403	13226E0449

SCALE
SHEET 45

REVISIONS				
ZONE	LTR	DESCRIPTION	DATE	APPROVED
	A	SEE ECP NO. 84HE0841	12 JUL 85	[illegible]
	B	SEE ECP NO. 84CE1204R1	10 OCT 85	[illegible]
	C	SEE ECP NO. 85CE1382	11 Apr 86	[illegible]
	D	SEE ECP NO. 85CE0732R2	25 Sep 86	[illegible]
	F	SEE ECP NO. 87CE0591	30 Mar 87	[illegible]

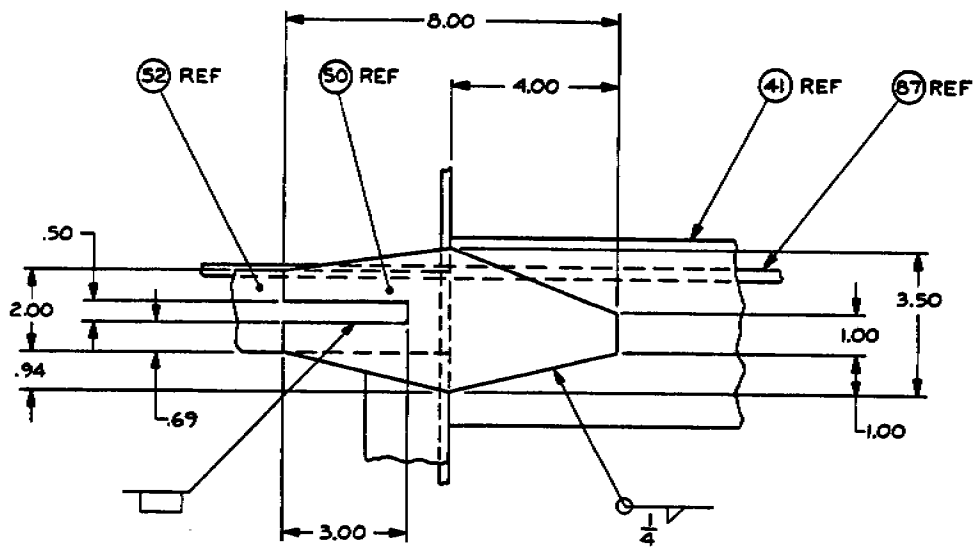

VIEW EV
(SH 44, ZONE C-6)

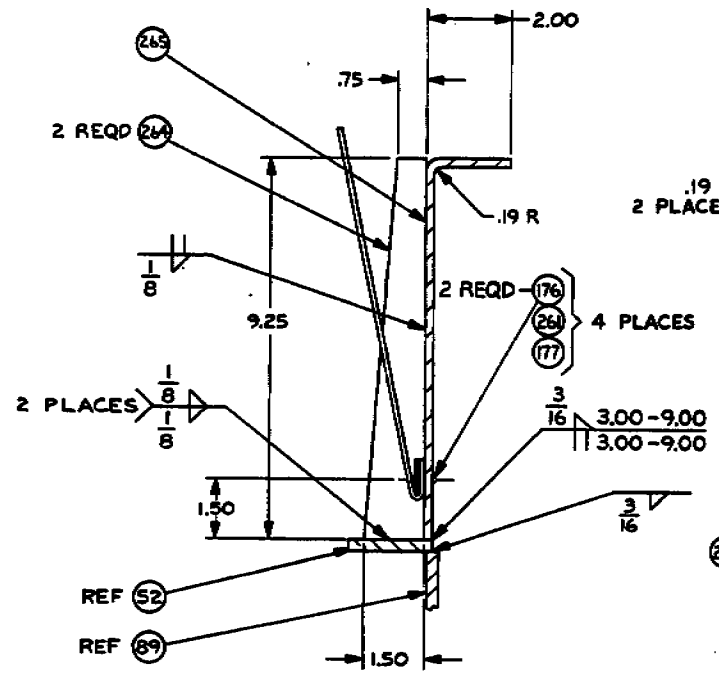

SECTION EW-EW
(SH 44, ZONE C-6)
ROTATED 90° CCW

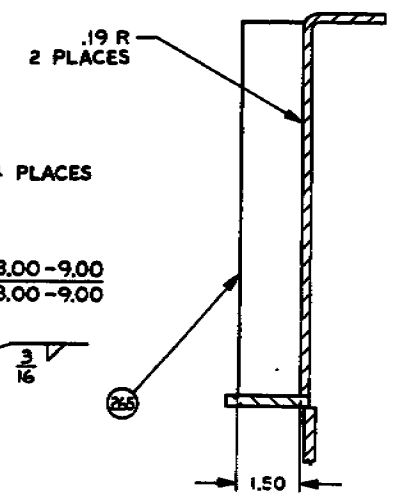

SECTION EW-EW
ALTERNATE CONSTRUCTION

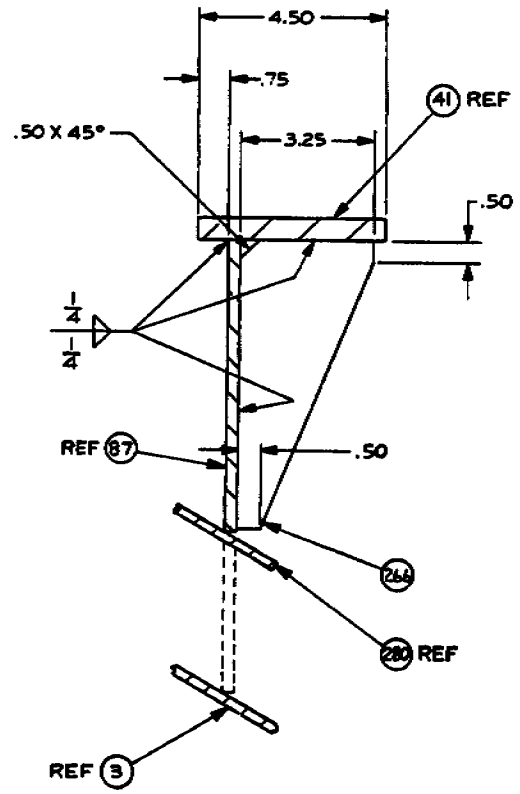

SECTION EY-EY
(SH 44, ZONE A-5)

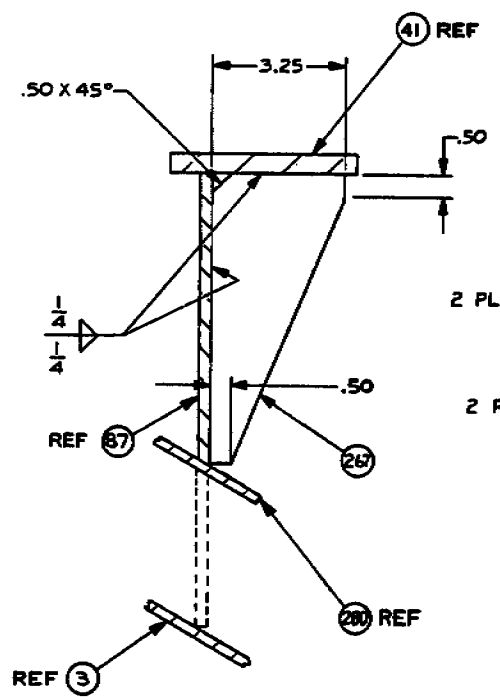

SECTION FA-FA
(SH 44, ZONE B-5)

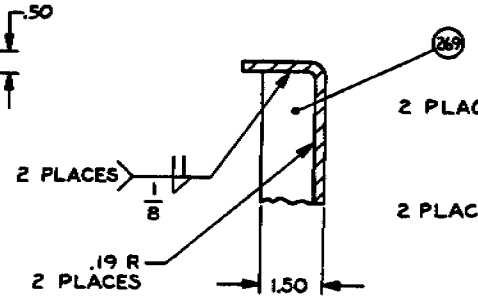

SECTION FB-FB
ALTERNATE CONSTRUCTION

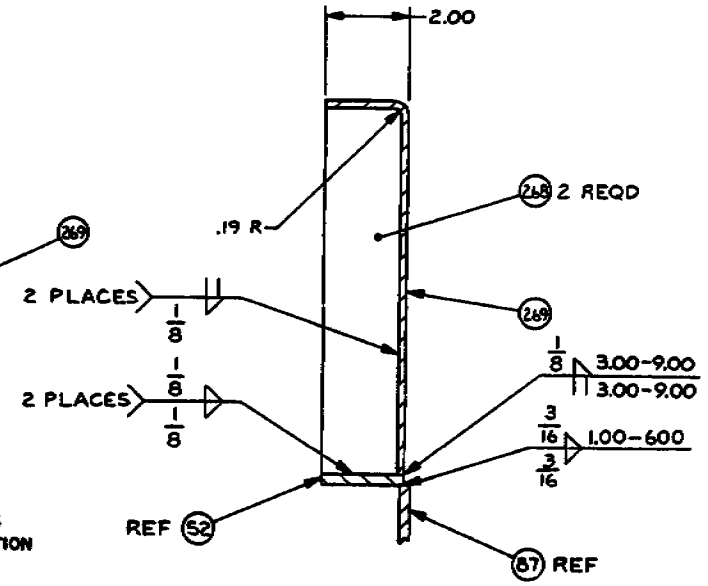

SECTION FB-FB
(SH 44, ZONE C-6)
ROTATED 90° CW

UNLESS OTHERWISE SPECIFIED DIM/TOLERANCES ARE IN.
ONE PLACE (.X) ±
TWO PLACE (.XX) ±
THREE PLACE (.XXX) ±
ANGLES ±
THIRD ANGLE PROJECTION
DO NOT SCALE THIS DRAWING
FOR INTERPRETATION OF DRAWING DOD STD-100 APPLIES
REMOVE BURRS AND BREAK SHARP EDGES
SHARP EDGES TO
FREEY BARR TO
MATERIAL

DRAWN BY JEF
DATE 8 DEC 83
CHECKED BY [illegible] 29 Dec 83
CONTRACT NO
REGIONAL APPROVAL [illegible]
DATE 4 Jan 84
APPROVED FOR PROCUREMENT [illegible]
DATE [illegible]

U.S. ARMY MOBILITY EQUIPMENT
RESEARCH AND DEVELOPMENT COMMAND
FORT BELVOIR, VIRGINIA 22060

HULL STRUCTURE,
USCSB MK 2

SIZE A1 | FSCM 97403 | DWG NO 13226E0449
SCALE | SHEET 46